Available online at www.sciencedirect.com
SCIENCE DIRECT®
Analytica Chimica Acta 539 (2005) 301–304
ANALYTICA CHIMICA ACTA
www.elsevier.com/locate/aca

Automated turbidimetric determination of cyclamate in low calorie soft drinks and sweeteners without pre-treatment

Natalia E. Llamas, María S. Di Nezio, Miriam E. Palomeque*, Beatriz S. Fernández Band*

FIA Laboratory, Department of Chemistry, Universidad Nacional del Sur, Av. Alem 1253, B8000CPB Bahía Blanca, Buenos Aires, Argentina

Received 18 February 2005; received in revised form 17 March 2005; accepted 21 March 2005
Available online 8 April 2005

Abstract

A flow injection turbidimetric method for determination of cyclamate in low calorie soft drinks and sweeteners without pre-treatment is proposed. It was based on the oxidation of the sulphamic group of cyclamate, to sulphate by addition of nitrite. Then, a precipitate of sulphate was obtained by reaction with barium chloride, in presence of poly(vinyl alcohol) (PVA) in perchloric acid solution, at 30 °C. The analytical signal was measured at 420 nm.

The method presented a linear range between 0.015 and 0.120% (w/v) and the calibration graph was $S = (7.792 \pm 0.179)\,X - (0.114 \pm 0.012)$, $R^2 = 0.999$. A reproducibility of 5.9% was obtained from nine calibration graphs that were carried out on different days and with different conditions (standard solution, reagents solution, etc.). The detection and quantification limits were 0.006 and 0.02% (w/v), respectively, the sample throughput 45 h^{-1} (by considering the wash cycle and the time consuming to eliminate the clean solution from the system). The obtained results were agreement with that obtained with the standard method.

Keywords: Cyclamate; Sweeteners; FIA; Turbidimetric

1. Introduction

Sodium and calcium cyclamates are additives widely used as non-nutritive sweetener in many diet and medicinal products. They are no longer permitted as a food additive in many countries including Canada, USA and European countries due to their conversion to cyclohexylamine, which is a strong carcinogen. However, they are available in other countries as a sweetener.

Several analytical procedures have been reported in literature for determining cyclamate in order to control the tolerance limit and avoid their excessive use. Analytical procedures such as high-performance liquid chromatography (HPLC) [1,2] or gas chromatography [3] were used to determine cyclamate. FIA-biamperometric titration [4], FIA-atomic absorption spectrometry (AAS) [5], FIA-spectrophotometry [6,7], FIA-chemiluminiscence [8], were used too. However, most of these methods require extraction procedures. Standard methods for cyclamate determination are Kjeldahl method [9] or gravimetric analysis [10], but these methods are tedious and time consuming.

In this paper we propose a flow injection (FI) turbidimetric method for cyclamate determination in artificial sweeteners and low calorie soft drinks without pretreatment. The method was based on the oxidation of the sulphamic group, which is present in cyclamates, to sulphate by using nitrite in acid medium. Afterwards, the sulphate ion is precipitated with barium in an appropriate medium. The aim of this method was to automatize the whole analytical process. Thus, the proposed method showed a good reproducibility, high sample throughput and the coloured samples can be analysed without interference.

* Corresponding authors. Tel.: +54 291 4595100; fax: +54 291 4595160.
E-mail addresses: palomeque@criba.edu.ar, mirpalom@hotmail.com (M.E. Palomeque), usband@criba.edu.ar (B.S.F. Band).

0003-2670/$ – see front matter © 2005 Elsevier B.V. All rights reserved.
doi:10.1016/j.aca.2005.03.044

2. Experimental

2.1. Reagents and solutions

Solutions were prepared with analytical reagent-grade chemicals and ultra pure water of Milli-Q quality (18.3 mΩ cm^{-1}).

Cyclamate stock solution 4% (w/v) was prepared from sodium cyclamate (Parafarm). Sodium nitrite (Merck) 0.2 mol l^{-1} was daily prepared by dissolving 3.45 g of Na NO_2 in 250 ml of pure water.

Barium chloride 30% (w/v)/poly(vinyl alcohol) (PVA) 0.05% (w/v)/perchloric acid 5.6 mol l^{-1} was prepared dissolving 0.025 g of PVA and 15 g of $BaCl_2{\cdot}2H_2O$ (Cicarelli) in water and mixing with 24 ml of $HClO_4$ 70% (w/v) (Cicarelli), making up to 100 ml with pure water.

Alkaline EDTA solution 0.6% (w/v) was prepared from ethylenediaminetetraacetic acid disodium salt dehydrate (Anedra) and 1.6 g of NaOH (Anedra) making up to 100 ml with water.

All acid solutions were prepared by appropriate dilution of the concentrated acids (HCl (37% Merck), H_2SO_4 (98% Merck), H_3PO_4 (85% Cicarelli)).

2.2. Apparatus

A Perkin-Elmer Lambda 2 spectrophotometer coupled with a FIAS 300 Perkin-Elmer was used to measure the signal at 420 nm (peristaltic pumps and injection valve are managed by the FIAS software). A Hellma 178-010 QS flow cell (inner volume 18 μl) was also used.

All reaction coils were made of PTFE tubing (inner diameter: 0.8 mm).

A Julabo U3 thermostat was used.

2.3. Procedure

The developed flow injection system is shown in Fig. 1. Peristaltic pumps PP_1 and PP_2 worked intermittently. When PP_1 was turned on, the sample was injected in a water stream. Sodium nitrite solution and barium chloride/poly(vinyl alcohol)/perchloric acid solution merged in R_1 reactor, this reagent stream merges with the sample in R_2 reactor where sulphate was formed owing to cyclamate oxidation. The precipitate of $BaSO_4$ was obtained and the turbidimetric detection was carried out at 420 nm. Then, PP_1 was stopped and PP_2 was turned on. A high-flow stream of EDTA/NaOH passed through R_2 and the flow cell to wash out the precipitate which has been adsorbed on their walls. After 55 s PP_2 was stopped and PP_1 was turned on again in order to restart the process.

3. Results and discussion

3.1. Influence of chemical and FI variables

The variables influencing the performance of the method were optimised by the univariant method. The optimum values were selected depending on sensitivity and reproducibility of signals, and they are shown in Table 1.

As this method was based on turbidimetric detection, the obtained precipitate had to keep in suspension until the sam-

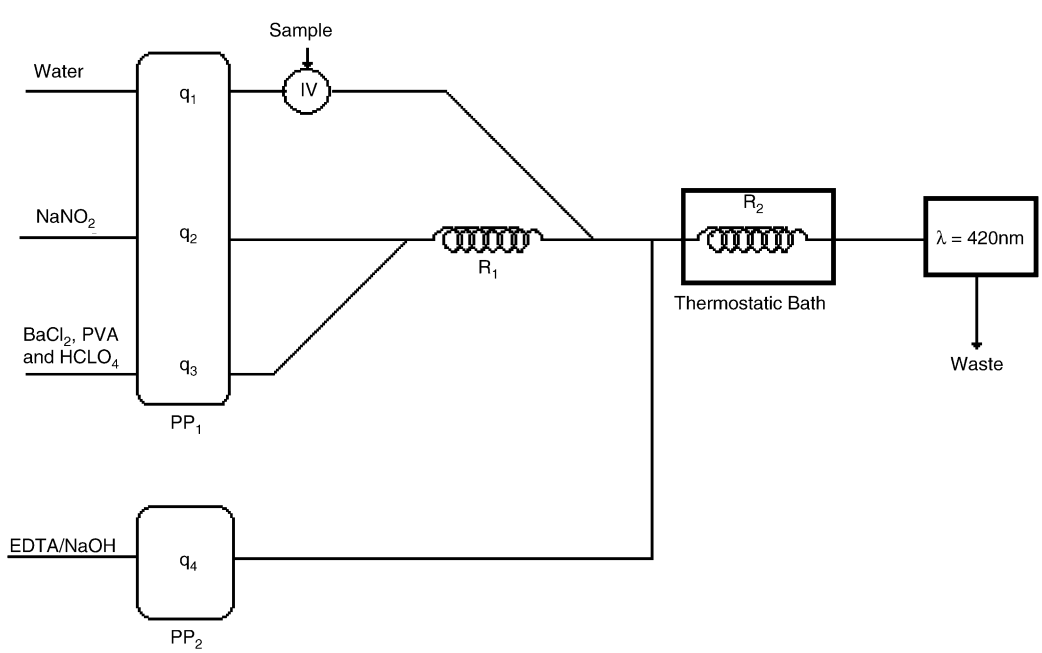

Fig. 1. FI manifold for cyclamate determination; PP_1, PP_2: peristaltic pumps; R_1, R_2: reactors; I.V.: injection valve; q_1, q_2, q_3, q_4: flow rates.

Table 1
Optimization of FI and chemical variables

Variable	Studied range	Optimum value
Reactor length, R_1 (mm)	300–900	600
Reactor length, R_2 (mm)	400–4200	3000
Sample loop (μl)	50–200	50
Carrier flow rate, q_1 (ml min^{-1})	1.4–2.9	2.2
$NaNO_2$ flow rate, q_2 (ml min^{-1})	1.4–2.9	1.5
$Cl_2Ba/PVA/HClO_4$ flow rate, q_3 (ml min^{-1})	1.4–2.9	1.9
EDTA/NaOH flow rate, q_4 (ml min^{-1})	–	4.9
$NaNO_2$ concentration (mol l^{-1})	0.1–0.3	0.2
$HClO_4$ concentration (mol l^{-1})	1.5–7.0	5.6
PVA concentration (%)	0.03–0.2	0.05

ple zone reach the flow cell in order to obtain good reproducibility.

A knotted reactor (R_2), with a suitable length and immersed into a water bath, was used. This kind of reactor let to decrease the dispersion of the sample zone. The temperature of the water bath was optimised, the studied range was 20–50 °C. The obtained FI signals showed that they increased up to 30 °C and at higher temperatures the signals remained constants. Therefore, 30 °C was selected.

The $BaCl_2$ solution was prepared in acid medium. Different acids were tested for $BaCl_2$ preparation such as H_3PO_4, HCl, H_2SO_4 and $HClO_4$. Phosphoric acid produced turbidness and was discarded, perchloric acid showed to be the most appropriated. Different concentrations of $BaCl_2$ and perchloric acid were optimised, the studied ranges were 8–40% (w/v) and 1.5–7.0 mol l^{-1}, respectively. The optimum values were: 30% (w/v) $BaCl_2$ and 5.6 mol l^{-1} $HClO_4$.

A stability agent was added at $BaCl_2$ solution in order to improve the reproducibility of the signal. Some agents as gelatine, poly(vinyl alcohol) (PVA) and KCl/HCl were tested. The best reproducibility was obtained when PVA was used.

A wash cycle was implemented for eliminating the baseline drift caused by adhering barium sulphate on the inner walls of the reaction coils and the flow cell. For that purpose an intermittent pumping mode was used. By this way, the wash cycle let to sweep the precipitate away and to increase the sample throughput [11]. An alkaline EDTA solution [12,13] was selected as a wash solution and the concentration of this solution was optimized. The studied ranges were 0.2–0.8% (w/v) for EDTA concentration and 0.1–0.6 mol l^{-1} for NaOH concentration. Optimum values were 0.6% and 0.4 mol l^{-1}, respectively.

3.2. Effect of different additives

Species that are common additives in different soft drinks and sweeteners were tested, some of them were added in concentrations that are considered as the maximum allowed for the regulation codex of our country. They are: sucrose (3%, w/v), glucose (3%, w/v), citrate (5%, w/v), ascorbic acid (0.05%, w/v), benzoate (0.05%, w/v), phosphate (0.01%, w/v), carbonate (0.05%, w/v), saccharine (0.02%, w/w), acesulfame K (0.02%, w/v). Not interference were found of these species when the proposed method was applied (relative error <3%).

Some commercial juices had caused interference owing to their own colour which absorbed at the same wavelength of this determination. However, this interference was overcome by doing the difference between the value obtained with the proposed system and that value obtained when nitrite solution is replaced by water in the system.

The most important interference was the presence of aspartame which cause a positive interference with a relative error >10%. However, this interference was not so important because it is not usual to find commercial samples with cyclamate and aspartame together.

3.3. Analytical parameters

Under the selected experimental conditions above described, the calibration graph was linear over the range 0.015–0.120% (w/v) of sodium cyclamate. The calibration line is $S = (7.792 \pm 0.179)X - (0.114 \pm 0.012)$, $R^2 = 0.999$ (where S is the turbidity and X the concentration of sodium cyclamate in g% (w/v)). In order to obtain the reproducibility, nine (9) calibration graphs were obtained on different days and conditions (standard solution, reagents solution, etc.) and the mean slope obtained was 7.520 ± 0.406 with R.S.D.% = 5.9.

Table 2
Analysis of real samples

Real sample[a]	Obtained concentration		Relative error (%)	Difference between means
	Proposed method[b]	Reference method[b]		
Liquid sweetener 1 (%, w/v)	8.74 ± 0.24	8.72 ± 0.04	+0.23	0.02
Liquid sweetener 2 (%, w/v)	6.31 ± 0.03	6.50 ± 0.04	−2.92	−0.19
Powder sweetener (%, w/w)	8.02 ± 0.49	8.10 ± 0.40	−0.99	−0.08
Beverage 1 (mg%, w/v)	29.9 ± 0.08	29.5 ± 1.45	1.35	4×10^{-4}
Beverage 2 (mg%, w/v)	100.0 ± 0.005	97.3 ± 0.22	2.73	2.66
Liquid juice (concentrated) (%, w/v)	0.461 ± 0.005	0.465 ± 0.01	−0.86	-4×10^{-4}
Powder juice (mg%, w/w)	58.3 ± 0.15	59.8 ± 0.65	−2.51	−1.5

Mean difference $\bar{d} = 0.13$.
[a] Concentration units showed into parentheses, as they appear on label of the commercial samples.
[b] Estimated values for $n = 4$ replicates ± standard deviation.

The detection and quantification limits were obtained considering the standard deviation of the linear regression ($S_{y/x}$) and for S/N = 3. The results were 0.006 and 0.02% (w/v) of sodium cyclamate, respectively.

The sample throughput (45 h^{-1}) was obtained taking into account the washing cycle.

3.4. Analysis of real samples

Commercial samples were obtained from a local supermarket and analysed using the optimum experimental conditions. Low calorie soft drinks, liquid and solid sweeteners were analysed.

In order to validate the proposed method, the official method [10] was used. The result obtained by the proposed method and that obtained by official method were compared applying a paired *t*-test [14] and they are shown on Table 2. The *t* calculated value (0.277) is less than t critical value (2.45 for $n = 7$, $\alpha = 0.05$), therefore there is no significant difference between the results obtained by both methods.

4. Conclusion

A simple, low cost, accurate and sensitive FIA method is proposed for the determination of cyclamate in commercial low calorie soft drinks and sweeteners. The results are in agreement with that obtained by AOAC method, which reveals its trazability.

The method is easy to implement compared with others [5,7] and expensive and toxic compounds that may bring secondary pollution are not used [2,5]. Moreover, one of the advantages of the method is that the samples were analysed without pre-treatment unlike others previously reported [6,7].

Acknowledgements

N. Llamas and B.S. Fernández Band express their gratitude to Consejo Nacional de Investigaciones Científicas y Técnicas (CONICET) de la República Argentina.

This work was totally supported by the Universidad Nacional del Sur, Bahía Blanca, Argentina.

References

[1] Q.C. Chen, S.F. Mou, K.N. Liu, Z.Y. Yang, Z.M. Ni, J. Chromatogr. A 771 (1–2) (1997) 135.
[2] M.M.F. Choi, M.Y. Hsu, S.L. Wong, Analyst 125 (1) (2000) 217.
[3] J.A.W. Dalziel, R.M. Johnson, A.J. Shenton, Analyst 97 (1972) 719.
[4] O. Fatibello Filho, M.D. Capelato, S.A. Calafatti, Analyst 120 (9) (1995) 2407.
[5] M.C. Yebra, P. Bermejo, Talanta 45 (6) (1998) 1115.
[6] C. Cabero, J. Saurina, S. Hernández-Cassou, Anal. Chim. Acta 381 (2–3) (1999) 307.
[7] S.T. Gouveia, O. Fatibello, J.D. Nobrega, Analyst 120 (7) (1995) 2009.
[8] I.M. Psarellis, E.G. Saratonis, A.C. Calokerinos, Anal. Chim. Acta 272 (1993) 265.
[9] USP United States Pharmacopoeia, XVI ed., 1960, p. 115.
[10] AOAC Official Methods of Analysis of the Association of Official Analytical Chemists, vol. 2, 15th ed., Arlington, VA 22201, USA, 1990, p. 1168.
[11] B. Karlberg, G.E. Pacey, Techniques and Instrumentation in Analytical Chemistry. Flow Injection Analysis: A Practical Guide, vol. 10, Elsevier, 1989.
[12] J.F. Van Standen, R.E. Taljaard, Anal. Chim. Acta 331 (1996) 271.
[13] J.A. Vieira, B.F. Reis, E.A.M. Kronka, A.P.S. Paim, M.F. Giné, Anal. Chim. Acta 366 (1998) 251.
[14] D.L. Massart, B.G.M. Vandeginste, L.M.C. Buydens, S. De Jong, P.G. Lewi, J. Smeyers Verbeke, Data Handling in Science and Technology 20[a]: Handbook of Chemometrics and Qualimetrics: Part A, Elsevier, 1997.