Skin-electrode impedance measurement during ECG acquisition: method's validation

Leonardo Casal[1] **and Guillermo La Mura**
Universidad Nacional de San Martín, Escuela de Ciencia y Tecnología,
San Martín, Buenos Aires, Argentina

E-mail: leoncasal@gmail.com

Abstract. Skin-electrode impedance measurement can provide valuable information prior, during and post electrocardiographic (ECG) or electroencephalographic (EEG) acquisitions. In this work we validate a method for skin-electrode impedance measurement using test circuits with known resistance and capacitor values, at different frequencies for injected excitation current. Finally the method is successfully used for impedance measurement during ECG acquisition on a subject using 125 Hz and 6 nA square wave excitation signal at instrumentation amplifier input. The method can be used for many electrodes configuration.

1. Introduction

For bioelectric recordings such as electrocardiography (ECG) and electroencephalography (EEG), measurement of skin-electrode impedance can provide valuable information:

1- a mismatch in electrode-skin impedance reduces the common mode rejection ratio (CMRR) of the amplifier and leads to excessive power line interference [1];
2- impedance measurement allows determining if skin-electrode interface is good enough, avoiding skin abrasion prior to a recording [2];
3- continuous electrode impedance monitoring can be used for motion artefact estimation [3];
4- high impedance can lead to signal attenuation and distortion [4].

Because of the capacitive components corresponding to skin-electrode interface, alternate current (AC) measurement is needed to estimate the skin-electrode impedance. In particular, for dry contact electrodes, which capacitance is considerably high than wet electrodes [1-4].

The aim of this work is to validate a method capable of measuring skin-electrode impedance during ECG acquisition. The paper is organized as follows. We first describe the hardware used for signal acquisition and the implemented algorithm for measuring voltage drop due to injected current. Then we describe the electrical circuits used for method's validation based on known resistance R and capacitor C. We show results for measured impedances at 7.8 Hz, 31.2 Hz and 125 Hz and compare to model impedances. Finally, the method was successfully used for impedance measurement during an ECG acquisition on a subject.

2. Methods

2.1. Hardware description

[1] To whom any correspondence.

We implemented a biopotential measurement system based on Texas Instruments ADS1299 integrated circuit (IC) [5-6]. The IC provides an option for lead-off detection: it injects a square wave current at chosen instrumentation amplifier input with selectable amplitude and a frequency fixed at 7.8 Hz, 31.2 Hz or 125 Hz. We used 6 nA current peak amplitude (the smallest possible) in order to not disturb ECG signal in future recordings. The 7.8 Hz, 31.2 Hz and 125 Hz frequencies were used for method's validation, but only the 125 Hz frequency can be used for simultaneous ECG recording and electrode's impedance measurement. If necessary the 125 Hz frequency can be increased in multiples of 2. The voltage on instrumentation amplifier measures both ECG and excitation signal simultaneously. The data was sampled at 500 sps during 10 seconds for each frequency. When enabling lead off detection, the IC input impedance at direct current (DC) reduces from 1000 Mohm to 500 Mohm, based on its datasheet [5]. The instrumentation amplifier includes a patient protection resistor and an anti aliasing capacitor, as shown in figure 1.

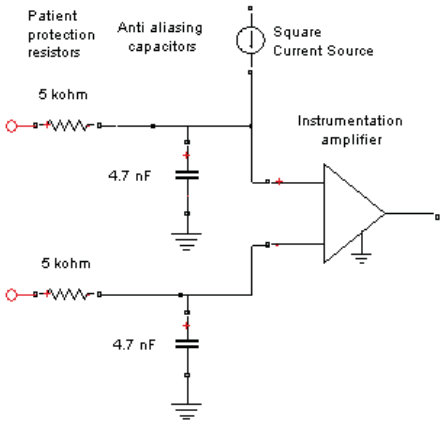

Figure 1. Implemented device's instrumentation amplifier with patient protection resistor, anti aliasing capacitor and square current source for skin-electrode impedance measurement.

2.2. Algorithm description

In order to measure skin-electrode impedance, we apply Ohm's law to injected current and measured voltage at instrumentation amplifier:

$$Z = \frac{V^{BP}{}_{RMS} \cdot \sqrt{2} \cdot \pi / 4}{I_{peak}}$$

where $V^{BP}{}_{RMS}$ is the root mean square (RMS) of the band-passed measured voltage and I_{peak} is the peak amplitude of the excitation current signal, i.e. 6 nA. Next we explain in detail this equation.

The first step is to separate the excitation signal from the ECG and 50 Hz power line noise using a bandpass filter, figure 2. We implemented a finite impulse response (FIR) filter, 300 order, Hamming window with centre frequency at corresponding excitation frequency. In this way we obtain the first harmonic of the square wave excitation signal, V^{BP}.

Figure 2. Signal processing of measured voltage due to injected current.

Next, we calculate RMS amplitude of the filtered signal, V^{BP}_{RMS} and multiply it by √2 to obtain first harmonic peak amplitude. Then we multiply by the scale factor π/4 to get the corresponding voltage square peak amplitude, according to Fourier Series Coefficients when n = 1:

$$square(t) = \frac{4}{\pi} \sum_{n=1,3,5...}^{\infty} \frac{1}{n} \sin\left(\frac{n \cdot 2 \cdot \pi \cdot t}{T}\right) \tag{1}$$

As we sampled at 500 sps, the 125 Hz square signal was subsampled and the measured first harmonic peak is 90.21 % of its corresponding amplitude, so we must correct for this factor. This value was obtained running a simulation of a square signal and measuring peak value of the first harmonic sampled at 500 sps. For a 125 Hz square signal we measured a 9.79 % peak reduction compared to expected value.

For 7.8 Hz and 31.2 Hz excitation, we subtracted ECG energy at 7.8 Hz and 31.2 Hz (measured without current injection) from band passed voltage, although this value was almost negligible compared to square signal energy.

2.3. Skin-electrode interface model

The skin-electrode interface can be modelled as a non-linear second order filter, described by a 6 time-varying parameters [4]. In our case we assumed only the predominant parameters: the skin-electrode interface was described by a parallel RC circuit, as shown in figure 3.

2.4. Method's validation: R and C known values

In order to validate the method, we measured the impedance of different load circuits, using 5 % tolerance R and C components. Configuration n1 consists of one resistor. Configuration n2 consists of two RC circuits to simulate the electrodes. These configurations, the measurement circuit and equivalent circuit are shown in figure 3 together with its corresponding impedance equations. The comparison between impedance model equation (using known R and C values) and measured impedance values allowed us to validate the method and determine the inputs stray capacitance due to cables, PCB and circuit implementation.

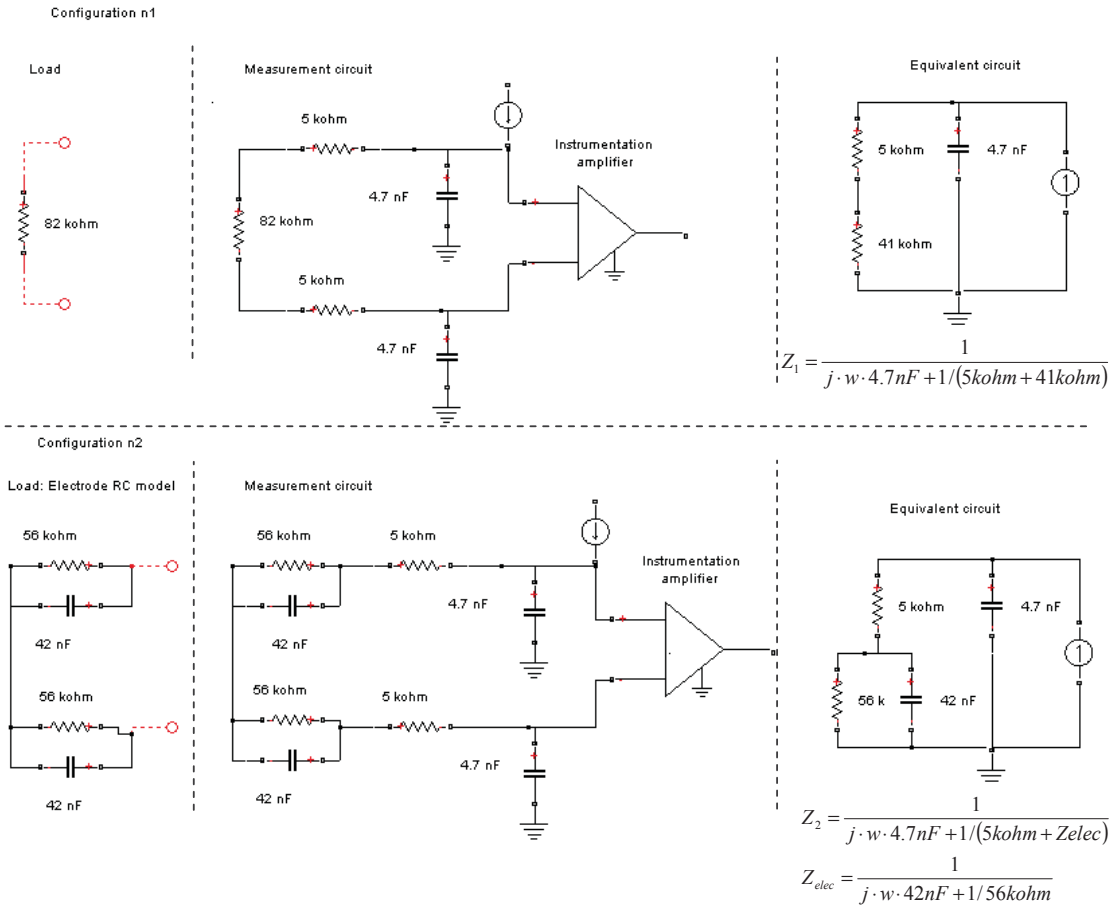

Figure 3. Configurations used to measure impedance and validate the method.

2.5. Method's application: simultaneous ECG acquisition

The method was applied to measure electrode impedance during ECG acquisition at different circuits, shown in figure 4. Configuration n3 includes an ECG patient simulator using the proposed RC model as electrodes. Configuration n4 consist of a real ECG measured on a subject using wet electrodes and right leg drive.

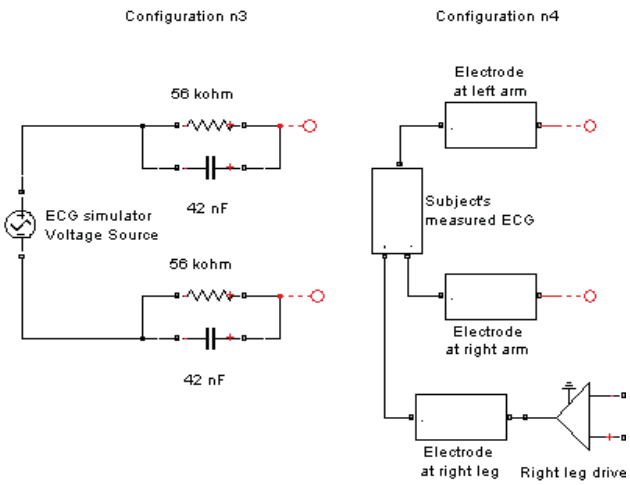

Figure 4. Configurations used to measure impedance during ECG acquisition.

3. Results and Discussion

3.1. Method's validation

Figure 5 shows measured impedance module at 7.8 Hz, 31.2 Hz and 125 Hz for different configurations n1 and n2 (with 20 % input current error bar according to IC datasheet) and corresponding impedance model including input stray capacitance. The total stray capacitance was estimated with a value of 10 nF.

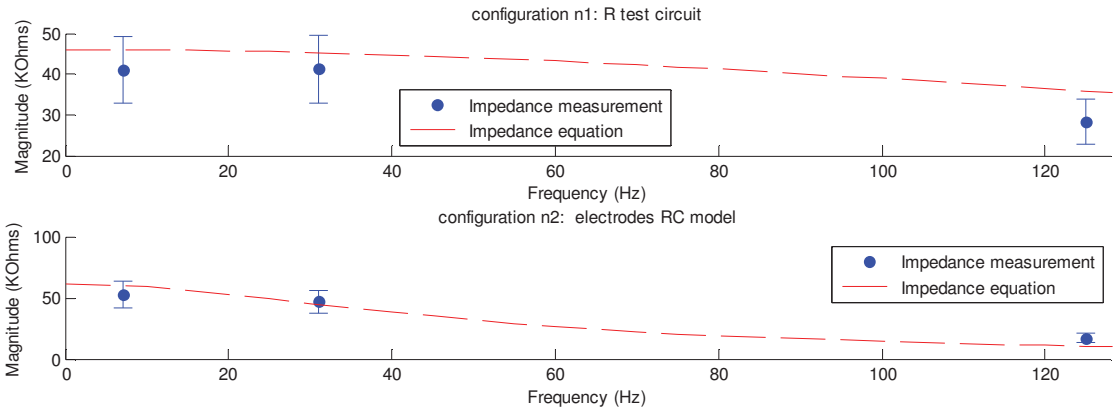

Figure 5. Measured and model impedance magnitude at 7.8 Hz, 31.2 Hz and 125 Hz for different configurations.

3.2. Method's application

Figure 6 shows time and frequency measured signals for configuration n3 (ECG simulator and electrodes simulator) for 125 Hz frequency excitation. We can see the corresponding peak at 125 Hz.

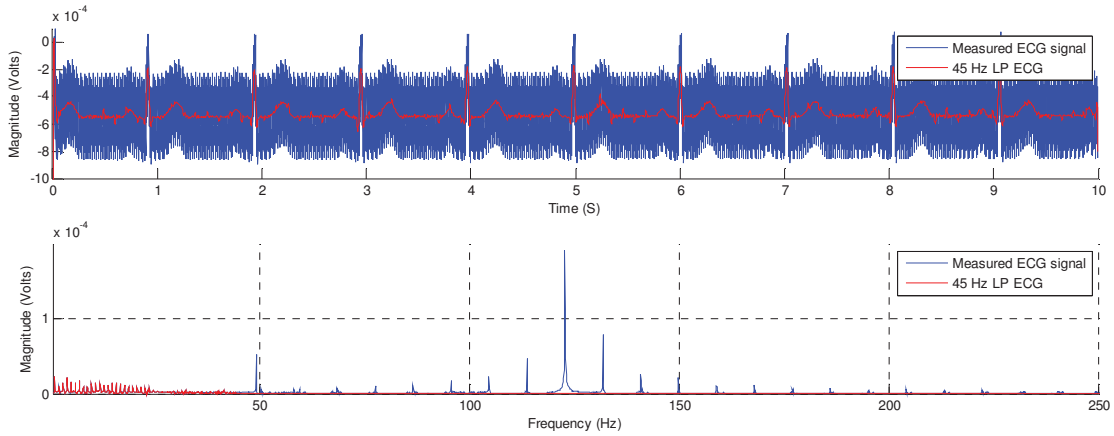

Figure 6. Time and frequency signals for configuration n3 (ECG simulator and electrodes simulator) for 125 Hz frequency excitation.

Figure 7 shows time and frequency signals for configuration n4 (ECG measured on a subject using wet electrodes) for 125 Hz frequency excitation. The 125 Hz excitation signal was easily filtered from the ECG signal using a low pass FIR filter, 45 Hz cut-off frequency, order 100.

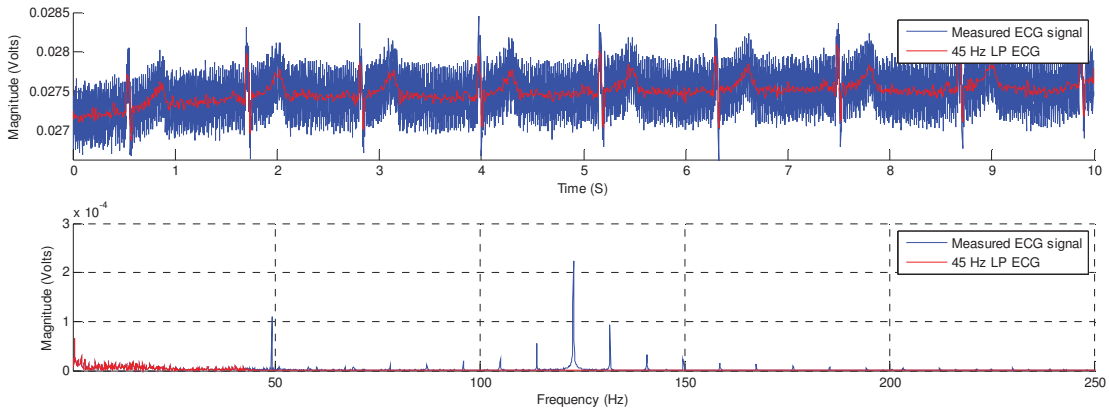

Figure 7. Time and frequency signals for configuration n4 (ECG measured on a subject using wet electrodes) for 125 Hz frequency excitation.

The electrode model parameters for configuration n4 (ECG measured on subject) are R = 56 KOhm and C = 42 nF for each electrode. This measurement can be repeated over time to evaluate impedance evolution during ECG acquisition. If more electrodes are used, excitation current can be injected on each channel to determine each electrode R and C value. The ECG signal shows low Signal to Noise Ratio (SNR) possibly due to elevated high electrode impedance.

4. Conclusions

A method for skin-electrode interface impedance measurement during ECG was proposed and validated using test circuits at different excitation frequencies. The chosen parameters for the excitation signal allowed us to use a simple pass band filter to separate ECG and excitation signal. The measured impedance showed good agreement with corresponding test circuit, thus validating the

method. The implemented device's input stray capacitance was estimated to 10 nF. Finally, the method was successfully used during an ECG acquisition on a subject.

For future work we propose to estimate R and C values impedance at 125 Hz sample by sample by an adaptive algorithm. Besides, the method should be tested on many electrodes configuration to determine each electrode R and C value. For special applications that need higher ECG frequencies, excitation and sampling frequencies must be increased and method's validation should be repeated.

5. References

[1] Degen T and Loeliger T 2007 An improved method to continuously monitor the electrode-skin impedance during bioelectric measurements *Proc IEEE EMBS* 6294–6297
[2] Ferree T, Luu P, Russell G and Tucker D 2001 Scalp electrode impedance, infection risk, and EEG data quality *Clinical Neurophysiology* 536–544
[3] Kim S, Firat R et al 2010 A 2.4 uA continuos-time electrode-skin impedance measurement circuit for motion artefact monitoring in ECG acquisition system *Symp on VLSI IEEE* 219–220
[4] Assambo C, Baba A, Dozio R, Burke M 2007 Determination of the parameters of the skin-electrode impedance model for ECG measurement *Proc. Int. Conf. on Elect. HW* 90–95
[5] ADS1299 Datasheet, Texas Instruments, http://www.ti.com/lit/ds/symlink/ads1299.pdf
[6] ADS1299EEG-FE User's Guide, Texas Instruments, http://www.ti.com/lit/ug/slau443a/slau443a.pdf