Femtosecond soliton source with fast and broad spectral tunability

Martin E. Masip[1,2], Andrés A. Rieznik[2,3], Pablo G. König[3], Diego F. Grosz[2,3], Andrea V. Bragas[1,2] and Oscar E. Martinez[1,2,*]

[1] *Laboratorio de Electrónica Cuántica, Departamento de Física, Universidad de Buenos Aires, Pabellón I, Ciudad Universitaria, (1428) Buenos Aires, Argentina.*

[2] *Consejo Nacional de Investigaciones Científicas y Técnicas, Argentina*

[3] *Instituto Tecnológico de Buenos Aires, Buenos Aires, Eduardo Madero 399, (1106) Buenos Aires, Argentina*

[*] *Corresponding author: mmasip@df.uba.ar*

We present a complete set of measurements and numerical simulations of a femtosecond soliton source with fast and broad spectral tunability and nearly constant pulse width and average power. Solitons generated in a photonic crystal fiber, at the low power coupling regime, can be tuned in a broad range of wavelengths ranging from 850 nm to 1200 nm using the input power as the control parameter. These solitons keep almost constant time duration ($\sim$ 40 fs) and spectral widths ($\sim$20 nm) over the whole measured spectra regardless of input power. Our numerical simulations agree well with measurements and predict a wide working wavelength range and robustness to input parameters.

OCIS codes: 060.5295, 320.7140.

Soliton formation in fibers [1, 2] can be understood as a compensation between two effects, self-phase modulation (SPM) and group velocity dispersion (GVD) in the anomalous dispersion regime. During soliton propagation, some non-linear effects other than SPM may arise. Intrapulse Raman scattering [3] is one of the most important, causing energy transfer from blue to red components and is responsible for the pulse temporal and central-frequency shifts, called Raman-Induced Frequency Shift (RIFS). For a soliton of order $N = \gamma P_0 T_0^2 / \mid \beta_2 \mid = 1$, the frequency shift due to RIFS is $\Delta\nu_R = -4T_R(\gamma P_0)^2 z/15\pi \mid \beta_2 \mid$, where T_R is the Raman response time, γ is the

nonlinear coefficient of the fiber, P_0 is the peak power of the soliton, T_0 is the pulse width at 1/e, β_2 is the GVD dispersion parameter and z is the fiber length [4]. In highly non-linear Photonic Crystal Fiber (PCF) [5], RIFS is very effective and a wide tuning range can be achieved using a rather short fiber length and low-power pump pulses [6–8]. In this paper, we present a wide power-tunable femtosecond source, which frequency can be modulated in the microsecond range. Our measurements reveal that spectrum, pulse width and average soliton power are constant over the whole frequency range, in excellent agreement with simulations based on the scalar non-linear Schr equation (NLSE) [9].

The experimental setup is shown in Fig.1. The pump source is a Ti:Sapphire laser (KMlabs) that provides 37 fs pulses (FWHM - sech^2) centered at λ_0 =830 nm, at a repetition rate of 94 MHz. The power launched into the fiber is selected by means of an acousto-optic modulator (AOM) (model AOM-402N, IntraAction Corp.), controlled by a high frequency AC power supply (model ME-40R, IntraAction Corp.). A prism compressor is used to pre-compensate the pulse dispersion caused by passing through the AOM and to control the pulse chirp. In this experiment, we launched chirp-free pulses of 1 mW to 10 mW of average power into a 75 cm length fiber with zero dispersion wavelength at 790 nm (non polarization-maintaining fiber, NL-2.3-790-02, Thorlabs), 1.6 μm mode diameter and $\beta_2(\lambda_0) = -13$ fs^2/km. Coupling lens provides an efficency of 54 %.

The beam out of the fiber is collimated and sent to an spatial filter, Fig.1, which

selects only the soliton among the total spectrum. Since the equilateral prism of the filter transmits preferentially p-polarized light, we added a half wave plate before the fiber in order to get the maximum power out of the filter, *i.e.* we chose a p-polarized output soliton. With this scheme spectra and pulse width of the soliton can be measured alternatively. Spectrum was recorded with a Jarrell-Ash monochromator coupled to a Si photodiode and pulse width with an interfometric autocorrelator.

Spectrum evolution as a function of input average power, from 1 mW to 20 mW is shown in Fig.2, exhibiting a soliton tunability range from 850nm to 1100nm. We focus this work in the low power regime of this spectrum. Below about 10 mW the spectrum shows one branch , meaning that only one soliton of order N=1 is released after the pump pulse fission. Also, non-solitonic radiation (NSR) is generated on the blue side of the spectrum. Fig.3 shows spectra and interferometric autocorrelations of the soliton for three different values of the average input power: 4 mW, 6 mW and 10 mW. Fig.3 shows clearly that the spectral as well as the temporal width remain almost constant over the tested range. Moreover, the power of the soliton (p-polarized) remains constant at 1 mW. This differs from other published results where an increment in soliton power is measured. For the three measured powers corresponding pulse widths (central wavelength, spectral width) are 44fs (882 nm, 21 nm), 42fs (925 nm, 23 nm) and 41 fs (962 nm, 18 nm).

Our measurements for the central wavelength are restricted to below 1 μm, due to the photodiode response. However, simulations predict a similar soliton behavior for a

much wider spectal range, as it is shown below. As the output pulse carrier frequency is adjusted by changing the input pulse energy, this can be accomplished by the AOM in the time elapsed between two successive pulses of the train, i.e. 10 ns.

In order to compare our results with theory we solved the scalar NLSE using the complete Raman integral:

$$\frac{\partial A}{\partial z} + \frac{\alpha}{2}A - \sum_{k=2} \frac{i^{k+1}}{k}\beta_k \frac{\partial^k A}{\partial T^k} = i\gamma \left(1 + i\frac{1}{\omega_0}\frac{\partial}{T}\right)\left(A(z,T)\int_{\infty}^{\infty} R(s) \mid A(z,t-s) \mid^2 \, ds\right) \tag{1}$$

where $R(t) = (1 - f_R)\delta(t) + f_R h_R(t)$ is the response function, f_R represents the fractional contribution of the delayed Raman response, and $h_R = (\tau_1^2 + \tau_2^2)/(\tau_1\tau_2^2)exp(-t/\tau_2)sin(t/\tau_1)$ is the response function with parameters $\tau_1 = 12.2$ fs and $\tau_2 = 32$ fs, as described in [4]. The fourth-order Runge-Kutta method was used to perform the temporal integration, i.e., to integrate the terms of the equation containing the Raman response. The MATLAB scripts used to perform the simulations are available at [10].

For the simulations we used a fiber length of 0.75 m, $\gamma = 78$ W^{-1}km^{-1}, and 830 nm as input central wavelength. The dispersion curve was provided by the fiber's manufacturer, with $\beta_2 = -12.4$ ps^2/km and $\beta_3 = 0.07$ ps^3/km. The field was discretized using 2^{11} sample points in a 8 ps time window (given dt = 8 ps / $2^{11} \sim 0.004$ ps and a total spectral window of 1/dt = 256 THz). Simulations results showing the pulse

and spectral width as function of its central wavelength are shown in Fig.4 together with experimental results. There is a very good agreement between measurements and simulations, with small differences. Simulations predict that the soliton power increases with the input power, in disagreement with the experimental observations. This difference can be explained since simulations overestimate energy transfer from the pump pulse to the longer wavelengths. In our simulations the non-linear coefficient frequency dependence is given by $\gamma(\omega) = \gamma(\omega_0) + \gamma_1(\omega - \omega_0)$, where ω_0 is the angular frequency of the field at 830 nm, $\gamma(\omega_0) = 78W^{-1}Km^{-1}$ and $\gamma_1 = \gamma/\omega_0$, accounting a variation of $\sim 15\%$ in γ at 830 nm and 970 nm. As stated before, simulations also reveal a wide wavelength range in which pulse duration remains nearly constant. This is a very attractive result since it shows the possibility of getting a truly constant ultrashort pulse with wide wavelength and fast tunability.

In conclusion, we observed that solitons generated in a photonic crystal fiber maintain almost constant pulse and spectral widths and power. Numerical simulations confirm our measurements and predict a broader spectral range where solitons retain their pulse width. The use of an AOM provides a tunable source with 10 ns set-time across the entire spectra. This source is very attractive for many applications, ranging from optical coherence tomography to multicolor non-linear microscopy.

References

1. A. Hasegawa and F. Tappert, Appl. Phys. Lett. **23**, 142 (1973).

2. L. F. Mollenauer, R. H. Stolen and J. P. Gordon, “Experimental Observation of Picosecond Pulse Narrowing and Solitons in Optical Fibers,” Phys. Rev. Lett. **45**, 1095 (1980).

3. P. Gordon, Opt. Lett., “Theory of the soliton self-frequency shift,”**11**, 662 (1986).

4. G. P. Agrawal, *Nonlinear fiber optics,* (Academic Press, New York, 1994).

5. P. St. J. Russell, “Photonic Crystal Fibers,” Science **299**, 358 (2003).

6. X. Liu, C. Xu, W. H. Know, J. K. Chandalia, B. J. Eggleton, S. G. Kosinski and R. S. Windeler, Opt. Lett., “Soliton self-frequency shift in a short tapered airsilica microstructure fiber,” **26,** 358 (2001).

7. N. Nishizawa, Y. Ito and T. Goto, “0.78-0.90-m wavelength-tunable femtosecond soliton pulse generation using photonic crystal fiber,” IEEE Photon. Technol. Lett. **14,** 986 (2002).

8. N. Nishizawa and T. Goto, IEEE Photon. Technol. Lett., “Compact system of wavelength-tunable femtosecond soliton pulse generation using optical fibers,” **11,** 325 (1999).

9. Ishii, N., C. Y. Teisset, S. KÃhler, E. E. Serebryannikov, T. Fuji, T. Metzger, F. Krausz, A. Baltuška and A. M. Zheltikov, “Widely tunable soliton frequency shifting of few-cycle laser pulses,” Physical Review E, **74**, 1 (2006).

10. A. Rieznik, ”Matlab scripts for complete Raman response simulations,” http://photonics.incubadora.fapesp.br/portal/download/ssfm-with-raman

List of Figures

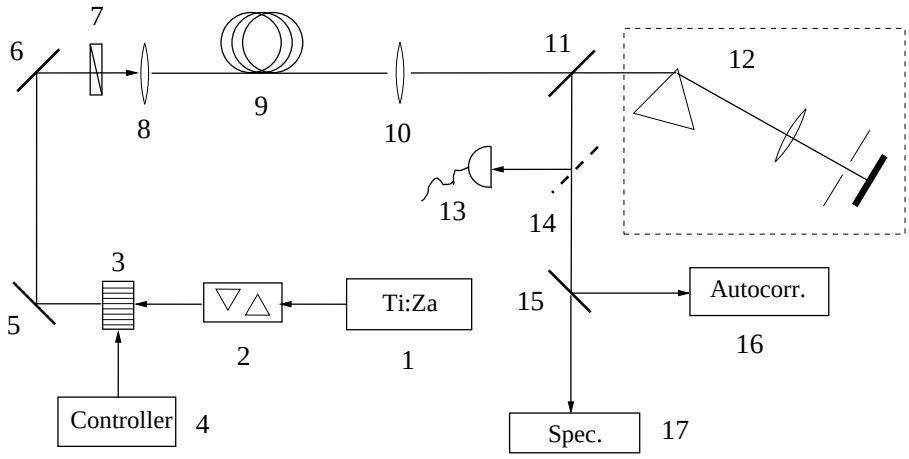

Fig. 1. Schematic diagram of the experimental setup: 1-Ti:Sapphire laser, 2-prism compressor, 3-AOM, 4-AOM Controller, 5-6-11-14-15-mirror, 7-half-wave plate, 8-coupling lens, 9-PCF fiber, 10-lens, 12-spatial filter, 13-power meter, 16-interferometric autocorrelator, 17-spectrum analyzer.

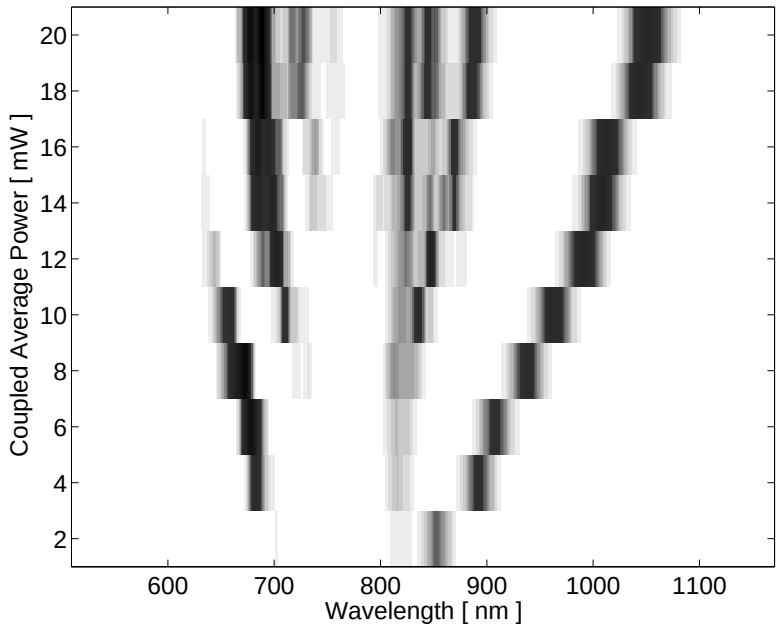

Fig. 2. Spectrum evolution as a function of the input average power.

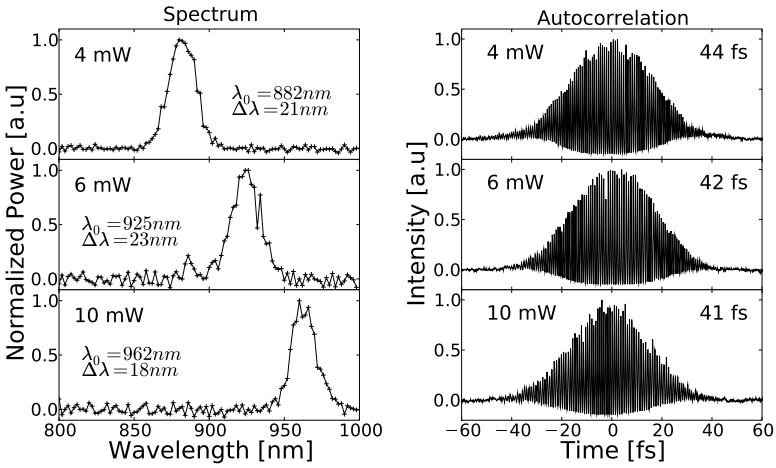

Fig. 3. Filtered output soliton spectral and autocorrelation measurements for 4 mW, 6 mW and 10 mW of average power.

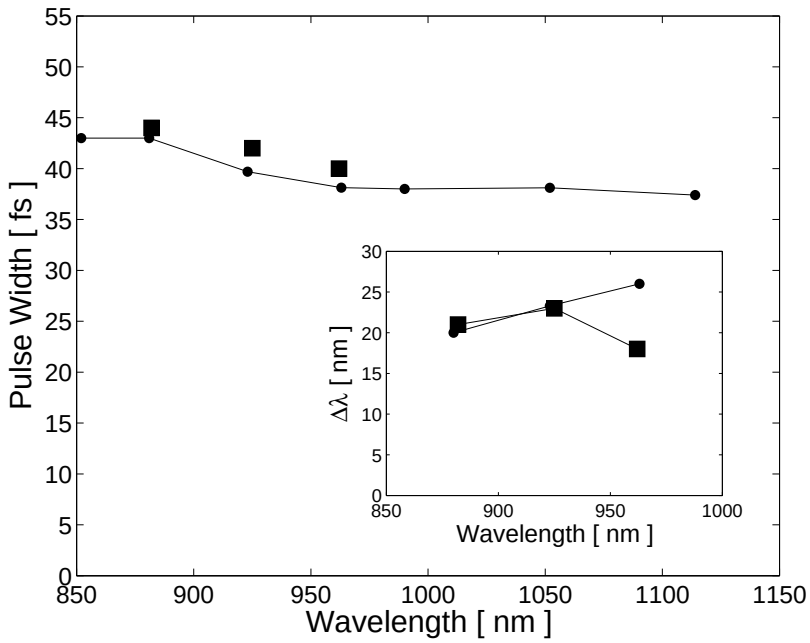

Fig. 4. Measurement (squares) and simulation (circles) of the pulse duration as a function of the central wavelength of the filtered output soliton. Inset: spectral width as a function of the central wavelength of the soliton.