Available online at www.sciencedirect.com
SCIENCE DIRECT®
Applied Catalysis A: General 264 (2004) 151–159
APPLIED CATALYSIS A: GENERAL
www.elsevier.com/locate/apcata

In situ quantification of the active acid sites of $H_6P_2W_{18}O_{62}\cdot nH_2O$ heteropoly-acid through chemisorption and temperature programmed surface reaction of isopropanol

Luis A. Gambaro, Laura E. Briand*

Centro de Investigación y Desarrollo en Ciencias Aplicadas, Dr. Jorge J. Ronco-Universidad Nacional de La Plata, Consejo Nacional de Investigaciones Científicas y Técnicas, Calle 47 No. 257, C.C. No. 59, (B1900AJK) La Plata, Buenos Aires, Argentina

Received 6 June 2003; received in revised form 22 December 2003; accepted 22 December 2003

Abstract

Isopropanol chemisorption and temperature programmed surface reaction analyses were used to determine the nature, amount and acid strength of the active sites of bulk WO_3, monolayer supported tungsten oxide over titania and phospho-tungstic Wells–Dawson and Keggin type heteropoly-acids.

The temperature conditions were adjusted in order to cover the surface of the catalysts with a stable monolayer of intermediate chemisorbed isopropoxy species avoiding the adsorption of molecular isopropanol (non reactive) or surface reaction during the chemisorption process.

Chemisorbed isopropoxy species dehydrate towards propylene (no other redox products were observed) over the investigated catalysts. The number of active sites (N_s) was determined as the amount of propylene desorbed during the temperature programmed reaction analysis.

Heteropoly-anions possess the highest amount of active sites and acid strength among the investigated solid catalysts. Isopropanol chemisorbs both at the surface and the bulk of the heteropoly-anions due to the pseudo-liquid phase property of these materials. Moreover, the high acidity of the Brönsted and Lewis acid sites of the heteropoly-acids catalyze the reaction of the adsorbed isopropoxy species at a lower temperature (∼100 °C) than WO_3 and monolayer supported tungsten oxide species WO_x/TiO_2.

Additionally, the influence of the degree of hydration on the amount and acid strength of the active sites of the Wells–Dawson acid was investigated. The results showed that the fully hydrated acid possesses a higher amount of accessible sites than the fully dehydrated acid therefore, the amount of propylene is almost double in the first condition. However, no modification of the temperature of reaction of the isopropoxy species was observed.

Keywords: Temperature programmed surface reaction; Heteropoly-acids; Adsorption; Number of active sites; Wells–Dawson; Keggin

1. Introduction

The chemisorption of probe molecules is a well known method to characterize the surface of catalytic materials. Recently, the chemisorption of methanol was proved as a reliable method to determine the nature and number of surface active sites of oxide catalysts [1–6]. Briand et al. demonstrated that methanol chemisorbs as a stable monolayer of methoxy species on an oxide surface exposed to an atmosphere of 2000 ppm of methanol at 100 °C. Methoxy species CH_3O– are the intermediates in the selective oxidation/dehydration of methanol therefore, the quantification of the amount of methoxy species allows calculating the number of surface active sites in methanol selective oxidation [1]. The method was applied successfully on bulk metal molybdates and vanadates, bulk metal oxides and monolayer vanadium, molybdenum and tungsten supported catalysts [1–6]. More recently, the technique was also extended to isopropanol chemisorption in order to establish the number of surface active sites and the turnover frequency of bulk metal oxide catalysts towards isopropanol reaction [7].

A similar procedure, based on methanol adsorption at room temperature was applied by Farneth et al. on phosphomolybdic Keggin-type compound $K_{3-x}H_xPMo_{12}O_{40}$ [8]. The analysis of adsorbed species at 150 °C showed the presence of surface methoxy species. Again, temperature

* Corresponding author. Tel.: +54-221-4211353; fax: +54-221-4254277.
E-mail address: briand@quimica.unlp.edu.ar (L.E. Briand).

0926-860X/$ – see front matter © 2004 Elsevier B.V. All rights reserved.
doi:10.1016/j.apcata.2003.12.053

programmed reaction analysis demonstrated that methoxys are the intermediate species towards dehydration and oxidation products.

Similarly, photoacoustic Fourier-transform infrared spectroscopy studies performed by Moffat et al. on C_1–C_4 alcohols adsorbed over phospho-tungstic Keggin acid $H_3PW_{12}O_{40}$, demonstrated the formation of alkoxyl intermediates [9]. The authors observed the adsorption of 3–4 isopropanol molecules per Keggin anion after 5–10 h of exposure to the alcohol at 298 K. The alcohol initially adsorbs as a protonated species i-$C_3H_7OH_2^+$ and forms isopropoxyl species upon evacuation at about 323 K.

The activity towards isopropanol dehydration is used to characterize the acidity of heteropoly-acid compounds since the products distribution depends on the nature of surface active sites (and bulk active sites considering the pseudo-liquid behavior of heteropoly-compounds) [10–12]. Strong Brönsted (H^+) and Lewis acid sites catalyze the dehydration of isopropanol to propylene (di-isopropyl ether for weak Lewis acid sites) and redox/basic sites lead to the dehydrogenation of the alcohol to acetone [7]. The process of isopropanol dehydration to propylene involves the adsorption of the alcohol through the OH group and a β-hydrogen, the abstraction of the OH group to produce an intermediate carbocation species and the abstraction of the β-hydrogen to yield the olefin [13,14].

The acid strength of solid heteropoly-acid compounds (mainly of the Keggin type structure) is also measured through the heat of adsorption and the temperature of desorption of ammonia [15]. Additionally, Misono et al. studied the surface acidity of phospho-tungstic cesium salts through the infrared analysis of CO adsorbed at 110 K. The interaction of the probe molecule with the HPA generates three different signals depending on physisorbed or chemisorbed species [16].

The kinetics of adsorption and the amount of polar (alcohols) and non-polar molecules adsorbed on Keggin type compounds was extensively studied through infrared spectroscopy and thermogravimetric analysis [15–18]. Misono et al. established that the rate of alcohol sorption depends on the size of the probe molecule and that the amount of adsorbed molecules in $H_3PW_{12}O_{40}$ is an integral multiple of the number of protons [15]. The observation of the diffusion coefficients and adsorption of polar molecules into the bulk structure of the HPAs proved unequivocally the "pseudo-liquid phase" behavior of those compounds.

Bielánski et al. performed a detailed study of methanol adsorption–desorption on dehydrated $H_4SiW_{12}O_{40}$ through infrared spectroscopy and thermogravimetric analysis in order to obtain evidences on the mechanism of methyl-*tert*-butyl ether synthesis [16,17]. The authors demonstrated that up to 16 molecules of methanol are adsorbed per Keggin unit at 291 K. The formation of dimethyl ether and water was observed upon heating the catalyst up to 373 K although methanol is not completely desorbed out of the structure even at 523 K. No in situ studies of methanol reaction at temperatures higher than 373 K were performed.

The literature shows a variety of methods to study the acidity of heteropoly compounds. These methods, mainly applied on Keggin type structures, evaluate the acid strength and the amount of molecules adsorbed with probe molecules (ammonia, pyridine) different from actual reactants. The studies that used actual reactant molecules such as, alcohols, determine the total amount of adsorption sites rather the number of active acid sites at a certain temperature of reaction. The studies reported on the literature focused on the intermediate adsorbed species rather than the in situ identification and quantification of the products of reaction and the relationship between that information and the density of active sites. Moreover, a detailed review of the literature of the past 10 years shows almost no studies of the acidity of Wells–Dawson structures with probe molecules [19].

The present investigation screens isopropanol adsorption on a series of tungsten based catalysts, specially the phospho-tungstic Wells–Dawson type heteropoly-acid $H_6P_2W_{18}O_{62}\cdot nH_2O$ under different temperatures in order to reach the maximum coverage of intermediate reactive species towards dehydration products. The in situ temperature programmed surface reaction of the adsorbed species allows to determine the temperature of desorption and the quantity of propylene. The T_d is an indication of the acid strength of the active sites and the quantity of propylene is proportional to the number of active acid sites.

The aim of this study is to obtain the fundamentals of a technique based on in situ chemisorption and TPSR in order to applied an actual reactant as a probe molecule to measure the available active sites of an heteropoly compound at a desired temperature of reaction.

2. Experimental

2.1. Synthesis and characterization

The synthesis of the Wells–Dawson heteropoly-acid $H_6P_2W_{18}O_{62}\cdot nH_2O$ through the "etherate method" was previously published [20]. The method involves the reaction of an aqueous solution of $K_6P_2W_{18}O_{62}\cdot 10H_2O$ salt with concentrated HCl (37%). The mixture is shaken with diethyl ether in order to separate three phases: an upper ether layer, an aqueous layer and a heavy oily layer. The bottom layer that contains an etherate of the heteropoly-acid, is separated and the etherate is decomposed with the addition of water. The solution is evaporated until the acid crystallizes.

^{31}P NMR and infrared analysis assured the purity of the heteropoly-acid (data not shown).

Monolayer tungsten oxide supported on TiO_2 (Degussa P-25) was synthesized through incipient-wetness impregnation with an aqueous solution of ammonium metatungstate $(NH_4)_6H_2W_{12}O_{40}$ (Fluka AG) according to the method described in the literature [21]. The sample was dried at 100 °C and calcined at 500 °C for 12 h.

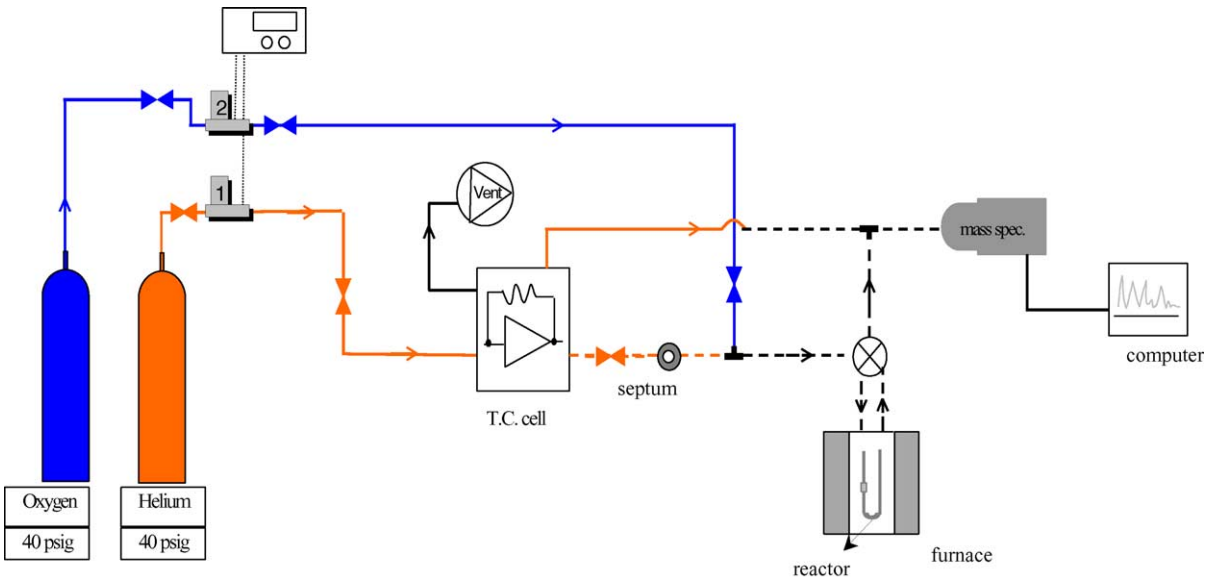

Fig. 1. Flow diagram of the TPSR equipment. (---) Heated lines.

Additionally, commercial phospho-tungstic Keggin acid $H_4PW_{12}O_{40}{\cdot}xH_2O$ (Fluka puriss.) was used.

2.2. Specific surface area analysis

The BET surface area of the dehydrated samples was determined through N_2 adsorption at 77 K with a Micromeritics Accusorb surface area analyzer.

2.3. Chemisorption and temperature programmed surface reaction spectroscopy

Chemisorption and TPSR analysis were performed with the equipment presented in Fig. 1. The system possesses a controlled flow of high purity oxygen for pretreatment and helium for adsorption–desorption studies. The sample is placed inside a U shape quartz reactor that is heated with an electric furnace. The heating rate is electronically controlled and registered with a computer. Typically, 100 mg of the sample is used during the experiments. The sample is pretreated at 400 °C for 1 h under a flow of pure oxygen prior to chemisorption and TPSR analysis. Then is allowed to cool down to the adsorption temperature under a flow of helium (35 cm^3 (NTP) min^{-1}). Successive pulses of 0.5 μl of isopropanol (Merck P.A., 100%) are dosed through a heated septum until the saturation of the heteropoly-acid is reached. The lines connecting the septum and mass spectrometer are heated at 120 °C to maintain the alcohol and products in the gas phase. The adsorption process is monitored in situ through a mass spectrometer and a conductivity cell that detect the non-adsorbed alcohol and/or the species desorbed from the sample. After the saturation, the sample is allowed to cool down to room temperature and then heated up to 400 °C at 10 °C/min for the temperature programmed reaction experiment. The species resulting of the isopropanol reaction are detected in the mass spectrometer and recorded in a computer.

Neither adsorption nor reaction of isopropanol was detected in a blank experiment.

2.4. Calibration of the mass spectrometer for isopropanol and propylene quantification

The characteristic $m/e = 45$ spectrometric signal of isopropanol was calibrated in order to establish the amount of adsorbed alcohol. A one-point calibration was performed with successive doses of 0.5 μl of isopropanol in a flow of 35 cm^3 (NTP) min^{-1} of helium (similar conditions as in the adsorption experiment). The mass spectrometer analysis was performed under a similar background pressure and acquisition speed as in the adsorption-TPSR experiments. An average area of 13841 ± 318 counts of the $m/e = 45$ signal was obtained after repeating the procedure 10 times.

Additionally, isopropanol generates a signal of $m/e = 41$ similarly to propylene [signals $(m/e = 45)/(m/e = 41)$ ratio equal 6.25]. This contribution of isopropanol to the $m/e = 41$ signal of propylene was subtracted in the adsorption and TPSR experiments.

The reaction of isopropanol over the heteropoly-acid at 100 °C allowed to calibrate the $m/e = 41$ spectrometric signal of propylene (see details in the following section). Isopropanol is completely converted to propylene over the Wells–Dawson heteropoly-acid at 100 °C therefore the signal registered in the mass spectrometric analysis corresponds to the stoichiometric amount of propylene obtained by isopropanol dehydration according to the following reaction:

$$C_3H_7OH \rightarrow C_3H_6 + H_2O \quad (1)$$

Isopropanol was dosed five times over the heteropoly-acid at 100 °C. The dehydration of 0.3 μl of isopropanol produces

3.90 μmol of propylene that generates a signal of 4582±453 counts in the mass spectrometer.

3. Results and discussion

3.1. Number of adsorption-active sites for isopropanol reaction over dehydrated $H_6P_2W_{18}O_{62}$

Previous studies demonstrated that the Wells–Dawson type heteropoly-acid $H_6P_2W_{18}O_{62}{\cdot}nH_2O$ contains crystallization water (typically, 24 molecules per formula unit) that is associated with the protons of the acid as $H^+(H_2O)_n$, H_3O^+ and $H_5O_2{}^+$ species. The water molecules are removed upon calcination at 400 °C leaving dehydrated H^+ species and keeping intact the primary structure of the acid [20,22]. Therefore, the pretreatment at 400 °C under an oxygen atmosphere ensures the complete dehydration of the acid and the oxidation of the tungsten addenda atoms.

Isopropanol adsorption was performed at 100, 70 and 40 °C to determine the more suitable conditions for the alcohol chemisorption on the active sites avoiding further reaction (a fresh sample was used in each experiment).

The adsorption and dehydration of isopropanol occurs rapidly at 100 and 70 °C producing propylene and water (see Fig. 2 for adsorption at 70 °C). Moreover, the Wells–Dawson heteropoly-acid is highly reactive towards dehydration at 100 °C since no isopropanol is detected during the adsorption experiment, which indicates that the alcohol is completely converted to propylene. No oxygenated products such as acetone or CO_x were detected during the adsorption experiment over the dehydrated acid.

Fig. 2 shows that the first dose of the alcohol is adsorbed with almost no dehydration to the olefin and in the successive doses the amount of isopropanol adsorbed and dehydrated reaches a steady state.

The adsorption of isopropanol at 40 °C does not produce propylene during the chemisorption experiment (data not shown).

Temperature programmed reaction spectra show that only propylene and water are produced through the dehydration of chemisorbed isopropanol at 40 and 70 °C (Fig. 3). No products were observed during the TPSR after chemisorption at 100 °C.

The observation that no molecular isopropanol is detected in the TPSR spectra indicates that no physisorption (or weak chemisorption) of the alcohol is produced even at 40 °C.

The adsorption and TPSR experiments give important information about the maximum number of available sites for isopropanol adsorption. Moreover, these experiments allow calculating the number of adsorption and active sites at a certain temperature.

Previously, it was shown that isopropanol adsorption and dehydration towards propylene reaches a steady state during the adsorption experiments (see Fig. 2). The quantity of propylene produced in the steady state is proportional to the amount of active acid sites. Moreover, the quantity of isopropanol adsorbed without reaction in the steady state is desorbed as propylene during the TPSR experiment. This amount is proportional to the number of adsorption sites that are occupied by intermediate alkoxy species at a certain temperature. The addition of the number of active and adsorption sites is the maximum amount of sites available for isopropanol adsorption/reaction of the Wells–Dawson heteropoly-acid. Table 1 show the number of acid sites (N_s) obtained through the methods described above, the fraction of active sites and the fraction of sites covered with a stable layer of intermediate species. The maximum amount

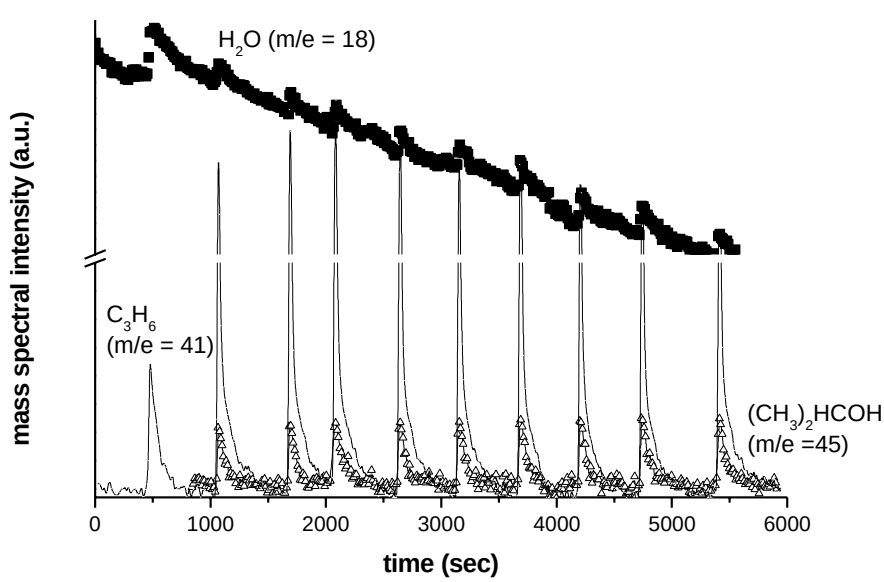

Fig. 2. Non-adsorbed isopropanol, water and propylene evolved during isopropanol chemisorption on dehydrated Wells–Dawson acid $H_6P_2W_{18}O_{62}$ at 70 °C. Isopropanol, $m/e = 45$ (up triangle); propylene, $m/e = 41$ (solid line) and water, $m/e = 18$ (square).

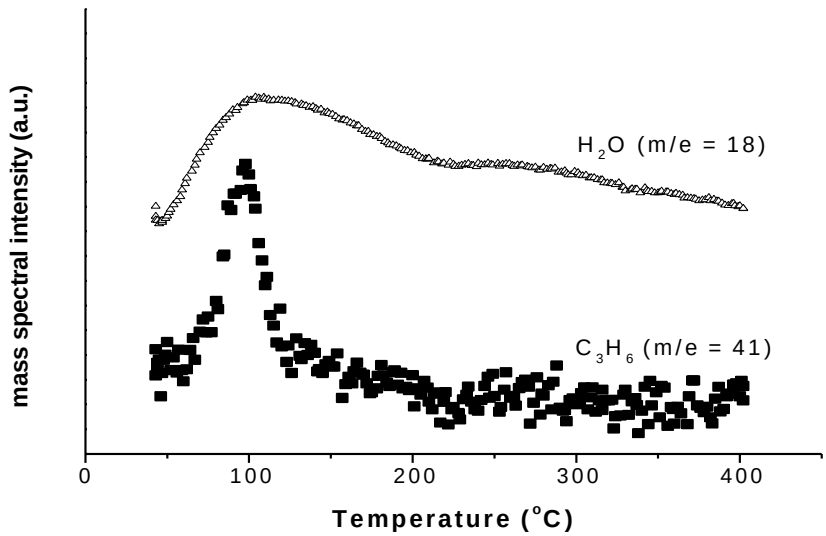

Fig. 3. Temperature programmed reaction analysis after isopropanol adsorption on dehydrated Wells–Dawson acid $H_6P_2W_{18}O_{62}$ at 40 °C. Propylene, $m/e = 41$ and water, $m/e = 18$.

of adsorbed isopropoxy species is achieved through isopropanol adsorption at 40 °C that avoids further reaction towards propylene. Under these conditions, the maximum number of active acid sites is suitable to be determined as the amount of propylene desorbed during temperature programmed reaction experiments (~8 μmol/m^2).

3.2. Comparison of the number and acid strength of the active sites of bulk, monolayer supported and tungsten based heteropoly-compounds

The number of surface active sites of dehydrated bulk tungsten oxide WO_3, monolayer supported tungsten oxide over titania 3% WO_3/TiO_2 and phospho-tungstic Keggin type acid $H_3PW_{12}O_{40}$ were also determined through isopropanol chemisorption (Table 2).

The maximum amount of surface isopropoxy species over tungsten oxide WO_3 was obtained through isopropanol adsorption at 110 °C according to the technique reported by Wachs and Kulkarni [7]. Monolayer supported tungsten oxide species produces propylene during isopropanol adsorption at 100 °C therefore, the chemisorption step was performed at 70 °C to avoid reaction.

Isopropanol chemisorption over dehydrated phospho-tungstic Keggin type acid $H_3PW_{12}O_{40}$ was performed at 40 °C similarly to phospho-tungstic Dawson acid. No surface reaction was detected at that temperature.

These catalysts produced propylene and water during the TPSR analysis (not shown). Therefore, the number of surface active sites N_s was calculated as the amount of propylene desorbed during the TPSR analysis per surface area unit (see Table 2).

The number of available surface sites for isopropanol adsorption of bulk tungsten trioxide and monolayer supported tungsten oxide catalysts, is orders of magnitude (0.9 μmol/m^2) lower than the heteropoly-acids (8–19 μmol/m^2). In the particular case of WO_3 and monolayer supported tungsten oxide catalysts, the adsorption of alcohol occurs exclusively at the surface. Moreover, the platelet morphology (anisotropic characteristics) of bulk tungsten trioxide allows the preferential adsorption of the alcohol at the edges of the crystals [7].

Table 1
Maximum number of active sites for isopropanol reaction and number of adsorption sites, fraction of active sites and adsorption sites at different temperatures of dehydrated phospho-tungstic Wells–Dawson acid $H_6P_2W_{18}O_{62}$

Temperature (°C)	N_{s1} [a] (μmol/m^2)	N_{s2} [b] (μmol/m^2)	θ_{active} [c]	$\theta_{adsorption}$ [d]
40	8.1	8.0	0.0	1.0
70	7.5	2.3	0.7	0.3
100	6.5	0.0	1.0	0.0

[a] Maximum number of active sites for adsorption/reaction of isopropanol calculated from the addition of the amount of propylene produced during chemisorption and TPSR experiments.
[b] Number of adsorption sites calculated from propylene desorption during TPSR.
[c] Fraction of active sites $= (N_{s1} - N_{s2})/N_{s1}$.
[d] Fraction of adsorption sites $= N_{s2}/N_{s1}$.

Table 2
Maximum number of active sites for isopropanol adsorption of WO_3, monolayer supported tungsten oxide on Ti_2O, phospho-tungstic Keggin and Wells–Dawson acids

Catalyst	S_{BET} (m^2/g)	Temperature of adsorption (°C)	N_s (μmol/m^2)	Temperature of isopropoxy reaction (°C)
WO_3	1.7	110	0.9	156
3% WO_3/TiO_2	37.3	70	0.9	140
$H_6P_2W_{18}O_{62}$	2.8	40	8.1	96
$H_3PW_{12}O_{40}$	1.9	40	19.8	112

Previous studies determined that monolayer supported tungsten oxide catalyst possesses a surface density of 4.2 tungsten atoms per nm^2 [21]. This information and the number of surface active sites N_s allows to estimate that one isopropanol molecule is adsorbed on ∼8 tungsten atoms.

At difference with bulk WO_3 and supported tungsten oxide species, the structure of the heteropoly-acids allows the adsorption of alcohol on the external surface and into the bulk of the solid. This unique property known as "pseudo-liquid phase behavior" is attributed to the wide distance between the Wells–Dawson units $P_2W_{18}O_{62}{}^{6-}$ in the crystal structure that allows the adsorption of polar molecules inside the solid bulk structure [15–19]. This property explains the higher N_s of the heteropoly-acids than conventional "surface" catalysts. However, further theoretical studies are necessary in order to determine if the whole bulk participates in the adsorption and the amount of tungsten atoms involved in the adsorption of one isopropanol molecule.

Table 3 compares the number of adsorbed molecules (ammonia, pyridine, alcohols) per anion reported in the literature and the present investigation. The Table also summarizes the techniques and conditions of the experiments, the pretreatment of the catalysts and the number of monolayers covered by adsorbed molecules. Many authors have estimated this theoretical number although, the actual stoichiometry of the adsorption (number of molecules adsorbed per tungsten atom of an heteropoly-anion) and the amount of heteropoly-anions per surface monolayer, are not known as stated before. However, we decided to performed that calculation only to compare with previous data found in the literature. This calculation was performed considering that the area of an isopropanol molecule covers $3.1 \times 10^{-19}\,m^2$, the dehydrated Keggin ($S_{BET} = 1.9\,m^2/g$) and Wells–Dawson ($S_{BET} = 2.8\,m^2/g$) anions possess $9.1 \times 10^{-21}\,m^2$ per anion and $2.0 \times 10^{-20}\,m^2$ per anion, respectively.

Most of the investigations has been devoted to determine the amount of adsorbed molecules through volumetric systems that maintains the adsorbent in contact with a gaseous atmosphere of the probe molecule for extended periods of time. Moffat et al. observed that isopropanol adsorption on phosphotungstic Keggin acid reaches the equilibrium after 5–10 h of exposure to the gas phase. Undoubtedly, this method allows saturating the material with more than a monolayer of adsorbed species and resembles the conditions of a batch reaction in the liquid phase rather than a flow reactor. The lower amount of adsorbed species obtained in the present investigation compared to the published data is attributed to the short contact time of the solids with the alcohol (about 7 min per pulse) which inhibits the diffusion of the molecules into the bulk structure.

Moreover, the present results indicate that a more accurate determination of the number of active sites requires the mimicking of the gas feed of a flow reactor that is, a stream of alcohol with the flow rate and concentration of an actual reaction.

The temperatures of surface reaction of isopropoxy species towards propylene over the different catalysts are shown in Table 2. The higher temperature of surface reaction over bulk tungsten trioxide and monolayer supported tungsten oxide catalysts than HPAs is attributed to the differences in the acidity of the active sites of those catalysts. Spectroscopic studies of dehydrated monolayer supported tungsten oxide catalysts demonstrated that the surface structure is composed by octahedrally coordinated WO_x species possessing W = O (mono-oxo) terminal bond and bridging W–O–S (S = metal or support cation) bonds. These species are polymerized at monolayer surface coverage [21].

Adsorption of NH_3 and pyridine bases has also demonstrated that supported metal oxide catalysts (Re, Cr, Mo, W, V, Nb, etc.) possess only surface Lewis acid sites at low surface coverage and both Lewis and Brönsted acid sites at high surface coverage [28].

A central phosphorous atom PO_4 surrounded by a cage of tungsten atoms composes the structure of Wells–Dawson and Keggin type heteropoly-acids. Similarly to monolayer supported tungsten oxide catalysts, each tungsten atom composes WO_6 octahedral units with one terminal double

Table 3
Summary of the literature regarding the adsorption of probes molecules on phospho-tungstic acid with Keggin and Wells–Dawson type structures

Sample	Pretreatment (calcination temperature) (°C)	Probe molecule	Technique	Adsorption (molecules per anion) [exposure/monolayers]	Reference
$H_3PW_{12}O_{40}$	200	Ammonia	Volumetric at room temperature	3	[23]
$H_3PW_{12}O_{40}$	320 450	Pyridine	Microbalance at 298 K	2.4 0.7	[24]
$H_3PW_{12}O_{40}$	350	C_2–C_4 Alcohols	Volumetric at 30 °C	4 for ethanol [64 monolayers] 2.5 for propanol [5–10 h exposure/∼76 monolayers] 0.34–0.45 for butanol [10–16 h/41 monolayers]	[9,25]
$H_3PW_{12}O_{40}$ $H_6P_2W_{18}O_{62}$ and others	150	NH_3	Adsorption and microcalorimetric measurements at 150 °C	2.70–2.98 for Keggin acid 5.0 for Wells–Dawson acid	[26,27]
$H_3PW_{12}O_{40}$ $H_6P_2W_{18}O_{62}$	400	Isopropanol	Micropulses of alcohol adsorption at 40 °C	0.12 for Keggin acid [4 monolayers] 0.71 for Wells–Dawson acid [11 monolayers]	This work

bonded oxygen and are linked together through W–O–W bonds.

However, many studies demonstrated that solid HPAs are Brönsted acids and are stronger than conventional solid acids such as SiO_2–Al_2O_3, sulfated zirconia SO_4^{2-}/ZrO_2 and titania SO_4^{2-}/TiO_2, etc [15,16].

The lower temperature of surface reaction of isopropoxy species over dehydrated Wells–Dawson (96 °C) than dehydrated Keggin (112 °C) heteropoly-acid is a measurement of the higher acid strength of the phospho-tungstic Wells–Dawson acid in the anhydrous form.

3.3. The influence of the degree of hydration on the amount of accessible active acid sites

The role of the degree of hydration on the catalytic activity of heteropoly-acids is a matter of controversy in the literature. Previous thermogravimetric and spectroscopic analysis of the phospho-tungstic acid $H_6P_2W_{18}O_{62}{\cdot}24H_2O$ showed that 17, 5 and 2 water molecules per Wells–Dawson unit evolved upon heating at 66–72 °C, 97–114 °C and 308–318 °C, respectively [22]. The nature of the acid sites is greatly modified upon dehydration although the primary structure remains unaltered up to 600 °C. The fully hydrated acid possesses large protonated water clusters $H^+(H_2O)_n$ which degrade to $H_5O_2^+$ at 200 °C and finally to isolated protonic sites when the acid is completely dehydrated.

According to theoretical studies performed by Thomas et al., the isolated acid sites trapped between Wells–Dawson units are inaccessible to the reagents causing the drop of the catalytic activity of the acid. The deactivation of the acid upon full dehydration was observed during methanol reaction and the synthesis of tetra-butyl ether (MTBE) in the gas phase at temperatures above 200 °C [20].

Isopropanol adsorption (at 40 °C) and TPSR analysis was performed on the fully hydrated acid and after in situ calcination at 70, 115 and 320 °C in order to obtain more insights on the role of the degree of hydration on the catalytic activity of the phospho-tungstic Wells–Dawson type acid.

The TPSR analysis after saturation of the fully hydrated acid with successive pulses of isopropanol shows the desorption of molecular alcohol at 77 °C, propylene at 107 °C, CO with three maxima at ∼120, 177 and 334 °C and water (see Fig. 4). The analysis after dehydration at 70, 115 and 320 °C is similar although no CO was detected.

The desorption of molecular isopropanol only on the hydrated acid (no molecular alcohol desorbs upon complete dehydration at 400 °C) indicates that the alcohol dissolves in the aqueous layer surrounding the primary structure of the $P_2W_{18}O_{62}^{6-}$ heteropoly-anion.

The production of CO during alcohols desorption experiments is attributed to the re-adsorption and further oxidation of primary products (e.g. the re-adsorption and

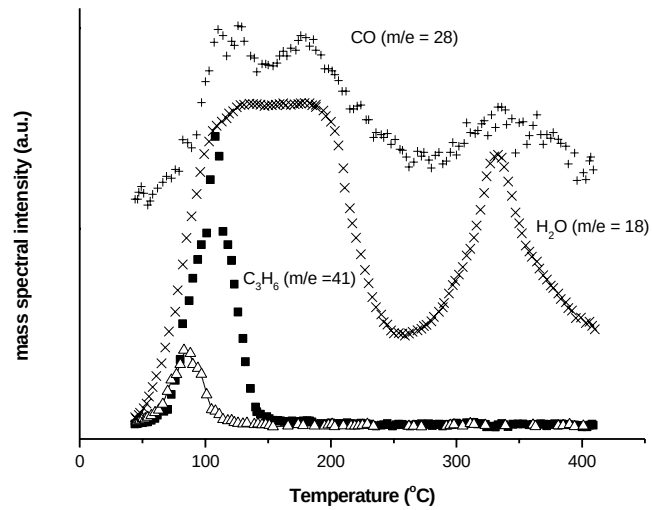

Fig. 4. Temperature programmed reaction analysis after isopropanol adsorption (at 40 °C) over the fully hydrated heteropoly-acid. Isopropanol, $m/e = 45$ (up triangle); propylene, $m/e = 41$ (square); water, $m/e = 18$ (×) and CO $m/e = 28$ (cross).

further oxidation of formaldehyde to CO_x during methanol chemisorption and TPSR over oxide catalysts) [29–31]. Similarly, the production of CO could be attributed to the oxidation of propylene that is unable to desorb out of the surface due to the presence of the aqueous layer.

Table 4 shows the amount of isopropanol molecularly absorbed and propylene produced as a function of the degree of hydration of the Wells–Dawson acid. The results give more evidences that the hydration water influences both molecular absorption of the alcohol and propylene production.

The amount of intermediate isopropoxy species towards propylene is directly influenced by the hydration water since fully hydrated Wells–Dawson acid produces twice the amount of propylene (52 μmol/g) that the anhydrous acid (25 μmol/g). Moreover a continuous drop of the amount of propylene is observed with the decrease of the degree of hydration of the Wells–Dawson structure.

This observation evidences that the loss of water leads to the shortening of the distance between the Wells–Dawson units and the decrease of the available active sites for isopropanol chemisorption.

Although previous publications indicated that the Wells–Dawson acid is completely dehydrated upon calcination at 320 °C, the present investigation shows that some water remains in the structure or is replenish during the adsorption since there is alcohol molecularly absorbed.

The observation that the temperature of surface reaction of isopropoxy species is ∼96 °C regardless of the degree of hydration of the Wells–Dawson acid shows that in general, the nature of the acid Lewis sites (most numerous) are not modify by water. This statement can not be applied to Brönsted acid sites (protonic sites) which nature is modified by the degree of hydration according to the studies of Thomas et al. discussed above.

Table 4
Calcination temperatures, degree of hydration, amount of methanol molecularly absorbed, amount of propylene produced during TPSR analysis and temperature of surface reaction of isopropoxy species towards propylene

Calcination temperature	Molecular formula	Degree of hydration[a]	Alcohol absorbed[b] (μmol/g)	Propylene[c] (μmol/g)	Temperature of isopropoxy reaction (°C)
No calcination	$H_6P_2W_{18}O_{62}\cdot 24H_2O$	100%	13.2	51.8	108
70 °C	$H_6P_2W_{18}O_{62}\cdot 7H_2O$	29%	8.7	50.0	94
115 °C	$H_6P_2W_{18}O_{62}\cdot 2H_2O$	8%	10.3	10.9	105
320 C	$H_6P_2W_{18}O_{62}$	Dehydrated	9.0	25.4	96
400 °C	$H_6P_2W_{18}O_{62}$	Dehydrated	0.0	24.7	96

[a] The degree of hydration was calculated considering that the fully hydrated acid contains 24 molecules of water (100%) and remains 7 and 2 water molecules upon calcination at 70 and 115 °C, respectively. Complete dehydration is achieved upon calcination at 400 °C.

[b] Amount of molecular isopropanol desorbed during TPSR analysis per unit weight of Wells–Dawson acid with the corresponding degree of hydration ($H_6P_2W_{18}O_{62}\cdot xH_2O$).

[c] Amount of propylene desorbed during TPSR analysis per unit weight of Wells–Dawson acid with the corresponding degree of hydration ($H_6P_2W_{18}O_{62}\cdot xH_2O$).

4. Conclusions

The present investigation shows for the first time in the literature that isopropanol chemisorption and temperature programmed surface reaction spectroscopy are suitable to be used to determine the nature, number and acid strength of the surface/bulk active sites of tungsten oxide based catalysts and particularly of the heteropoly-compounds.

The chemisorption of isopropanol at 40 °C (even room temperature) leads to the coverage of the catalysts with a monolayer of adsorbed isopropoxy species and avoids surface reaction. Heteropoly-compounds are highly active towards isopropanol dehydration above that temperature. Temperature programmed surface reaction analysis shows the decomposition of adsorbed isopropoxy species towards propylene at about 100 °C which evidences the acid nature of the active sites.

The number of available sites for isopropanol adsorption-reaction of Keggin and Wells–Dawson heteropoly-acids is significantly higher than bulk WO_3 and even monolayer supported tungsten oxide species. This observation evidences that the alcohol is adsorbed both on the surface and the bulk (up to a certain extension) in agreement with the pseudo-liquid phase behavior of the heteropoly-anion structure. Moreover, the temperature of surface decomposition of adsorbed isopropoxy species towards propylene is significantly lower on the heteropoly-acids rather than the other tungsten oxide based catalysts ($\Delta T \geq 28$ °C). This observation evidences the higher acid strength of the active acid sites of the heteropoly-compounds rather than WO_3 and monolayer supported tungsten oxide catalysts.

The degree of hydration of the heteropoly-anions greatly modifies the amount of accessible sites for isopropanol adsorption and further dehydration. However, does not influence the catalytic activity of the sites since the temperature of surface reaction of the isopropoxy species is about 96 °C regardless of the degree of hydration.

Acknowledgements

The authors are grateful to Dr. Luis Pizzio for providing the Keggin acid sample, Ing. Edgardo Soto for specific surface area analysis, and NSF-CONICET scientific collaboration program (res. N$^{\underline{o}}$ 0060)

References

[1] L.E. Briand, W.E. Farneth, I.E. Wachs, Catal. Today 62 (2000) 219.
[2] L.E. Briand, I.E. Wachs, Stud. Surf. Sci. Catal. 130 (2000) 305.
[3] L.G. Burcham, L.E. Briand, I.E. Wachs, Langmuir 17 (2001) 6164.
[4] L.G. Burcham, L.E. Briand, I.E. Wachs, Langmuir 17 (2001) 6175.
[5] L.E. Briand, I.E. Wachs, J. Catal. 202 (2001) 268.
[6] L.E. Briand, J.-M. Jehng, L. Cornaglia, A.M. Hirt, I.E. Wachs, Catal. Today 78 (2003) 257.
[7] D. Kulkarni, I.E. Wachs, Appl. Catal. 237 (2002) 121.
[8] W.E. Farneth, R.H. Staley, P.J. Domaille, R.D. Farlee, J. Am. Chem. Soc. 109 (1987) 4018.
[9] J.G. Highfiled, J.B. Moffat, J. Catal. 98 (1986) 245.
[10] H. Orita, T. Hayakawa, M. Shimizu, K. Takehira, Appl. Catal. 77 (1991) 133.
[11] L.R. Pizzio, C.V. Cáceres, M.N. Blanco, Appl. Catal. 167 (1998) 283.
[12] L. Pizzio, P. Vazquez, C. Cáceres, M. Blanco, Stud. Surf. Sci. Catal. 130 (2000) 953.
[13] A. Gervasini, J. Fenyvesi, A. Auroux, Catal. Lett. 43 (1997) 219.
[14] A.M. Youssef, L.B. Khalil, B.S. Girgis, Appl. Catal. 81 (1992) 1.
[15] T. Okuhara, N. Mizuno, M. Misono, in: D.D. Eley, W.O. Haag, B. Gates (Eds.), Catalytic Chemistry of Heteropoly Compounds, Academic Press, Adv. Catal. 41 (1996) 113.
[16] M. Misono, Chem. Commun. (2001) 1141.
[17] A. Bielański, J. Datka, B. Gil, A. Malecka-Lubańska, A. Micek-Ilnicka, Phys. Chem. Chem. Phys. 1 (1999) 2355.
[18] A. Bielański, A. Malecka-Lubańska, A. Micek-Ilnicka, J. Poźniczek, Topics Catal. 11/12 (2000) 43.
[19] L.E. Briand, G.T. Baronetti, H.J. Thomas, Appl. Catal. 256 (2003) 37.
[20] T. Baronetti, L.E. Briand, U. Sedran, H.J. Thomas, Appl. Catal. 172 (1998) 265.
[21] D.S. Kim, M. Ostromecki, I.E. Wachs, J. Mol. Catal. A Gen. 106 (1996) 93.

[22] J.E. Sambeth, G.T. Baronetti, H.J. Thomas, J. Mol. Catal. A Chem. 191 (2003) 35.
[23] J.G. Highfield, J.B. Moffat, J. Catal. 88 (1984) 177.
[24] B.K. Hodnett, J.B. Moffat, J. Catal. 88 (1984) 253.
[25] T. Okuhara, S. Tatematsu, K.Y. Lee, M. Misono, Bull. Chem. Soc. Jpn. 62 (1989) 717.
[26] F. Lefebvre, F.X. Liu-Cai, A. Aroux, J. Mater. Chem. 4 (1994) 125.
[27] N. Essayem, G. Coudurier, M. Fournier, J.C. Védrine, Catal. Lett. 34 (1995) 223.
[28] I.E. Wachs, Coll. Surf. 105 (1995) 143.
[29] A.S. Elmi, E. Tronconi, C. Cristiani, J.P. Gomez Martin, P. Forzatti, Ind. Eng. Chem. Res. 28 (1989) 387.
[30] G. Busca, J. Mol. Catal. 50 (1989) 241.
[31] K. Fukui, T. Aruga, Y. Iwasawa, Surf. Sci. 295 (1993) 160.