Arch Virol
DOI 10.1007/s00705-015-2449-4

ORIGINAL ARTICLE

Molecular characterization of infectious bursal disease virus (IBDV) isolated in Argentina indicates a regional lineage

F Vera[1] · M. I. Craig[2] · V Olivera[2] · F Rojas[1] · G König[3] · A Pereda[2] · A. Vagnozzi[1,2]

Received: 25 June 2014 / Accepted: 17 May 2015

Abstract In Argentina, classical vaccines are used to control infectious bursal disease virus (IBDV); however, outbreaks of IBDV are frequently observed. This could be due to failures in the vaccination programs or to the emergence of new strains, which would be able to break through the protection given by vaccines. Hence, genetic characterization of the viruses responsible for the outbreaks that occurred in recent years is crucial for the evaluation of the control programs and the understanding of the epidemiology and evolution of IBDV. In this study, we characterized 51 field samples collected in Argentina (previously identified as IBDV positive) through the analysis of previously identified apomorphic sequences. Phylogenetic analysis of regVP2 showed that 42 samples formed a unique cluster (Argentinean lineage), seven samples were typical classical strains (one of them was a vaccine strain), and two belonged to the very virulent lineage (vvIBDV). Interestingly, when the analysis was performed on the regVP1 sequences, the field samples segregated similarly to regVP2; thus, we observed no evidence of a reassortment event in the Argentinean samples. Amino acid sequence analysis of regVP2 showed a particular pattern of residues in the Argentinean lineage, particularly the presence of T272, P289 and F296, which had not been reported before as signature sequences for any IBDV phenotype. Notably, the residue S254, characteristic of the antigenic variant, was not present in any of the Argentinean samples.

Electronic supplementary material The online version of this article (doi:10.1007/s00705-015-2449-4) contains supplementary material, which is available to authorized users.

✉ A. Vagnozzi
vagnozzi.ariel@inta.gob.ar

[1] Laboratorio Sanidad Aviar, INTA EEA Concepción del Uruguay, Entre Ríos, Argentina

[2] Instituto de Virología, INTA CICV y A, 1686 Hurlingham, Buenos Aires, Argentina

[3] Instituto de Biotecnología, INTA CICV y A, 1686 Hurlingham, Buenos Aires, Argentina

Introduction

Infectious bursal disease (IBD) is an acute, highly contagious viral infection of young chickens (*Gallus gallus domesticus*). The etiological agent is infectious bursal disease Virus (IBDV), whose primary target is the lymphoid tissue of the bursa of Fabricius [1]. Therefore, IBDV infection may lead to immunosuppression, with variable consequences for the bird population, depending mainly on the virulence of the viral strain [2].

IBDV belongs to the family *Birnaviridae*, with a genome consisting of two segments (termed A and B) of double-stranded RNA (dsRNA), which are included in an icosahedral capsid of 60 nm diameter [3, 4]. Segment A (3.3 kb approximately) has two partially overlapping open reading frames (ORFs) [5]. The smaller of these encodes the non-structural protein VP5, which is not essential for replication *in vitro* [6]. The larger ORF of segment A encodes a polyprotein that is autocatalytically processed into three polypeptides [7]. These polypeptides are *i*) the precursor of the VP2 protein (48 kDa), *ii*) the VP4 protein (28 kDa), and *iii*) the VP3 protein (32 kDa). Segment B (approximately 2.9 kb), encodes the VP1 protein, which plays a role as an RNA-dependent RNA polymerase (RdRp) [8].

Two different IBDV serotypes have been recognized by virus neutralization tests [9]. Serotype 2 is not virulent for

Published online: 31 May 2015

chickens, while the serotype 1 includes strains with different degrees of virulence [10]. Since its first description [11], different vaccines have been developed, and vaccination has kept the disease under control. However, in the 1980s, the emergence of new serotype 1 strains was described. These strains have the ability to elude the protection given by the classic vaccines [12, 13]. Two events were involved in this process: antigenic drift, which resulted in the rise of antigenic variants (avIBDV) in the United States [14, 15], and the emergence of very virulent strains (vvIBDV) with the classical antigenic structure in Europe [16]. The new strains were later identified in different countries, particularly vvIBDV, which has become widespread throughout the world [17–22].

It has been suggested that the strong selection pressure generated by intensive vaccination of birds may lead to the emergence of viruses with new properties that are able to persist in immunized populations [10, 23], and therefore, a virus obtained from an outbreak should be characterized based on its antigenic and virulent properties for more efficient control of the disease [10]. However, the identification of new IBDV phenotypes requires laborious techniques such as virus neutralization (using a panel of monoclonal antibodies), or assays for evaluation of pathogenicity [24–26]. The increasing use of molecular technology applied to virus diagnosis has led to the development of strategies that allow the identification of IBDV without virus isolation. The analysis of nucleotide sequences has been largely used to characterize isolates. However, while sequence analysis can indicate whether the virus from any given sample is phylogenetically related to previously characterized reference strains, is does not give evidence for a particular phenotype. Nevertheless, previous studies have found a correlation between genetic changes in the variable region of VP2 and some phenotype features [15, 27–29]. Some of these changes have been confirmed by reverse genetics to be responsible for antigenic variation, adaptation to cell tissue culture, and attenuation [30–35]. Molecular characterization of IBDV has been based mainly on the analysis of the sequence of the variable region of VP2. However, there is evidence suggesting that VP2 is not the only protein responsible for pathogenicity of IBDV; other viral proteins may contribute to enhance the pathogenicity, particularly VP1 [30, 36]. In addition to this, it has been shown that different vvIBDVs form a tight cluster, quite separate from other IBDV strains, when segment B is analyzed, which justifies the characterization of IBDV strains based on both genomic segments [37], particularly because it has been noted that it is possible for IBDV to undergo genetic reassortment, which can play an important role in the evolution of these viruses [38–40].

In Argentina, classical vaccines are used to control IBDV; however, outbreaks of IBDV are frequently observed. This situation could be caused by failures in the vaccination programs or by the emergence of new strains that are capable of breaking through the protection given by the classical vaccines. The genetic characterization of the viruses involved in the recent outbreaks that occurred in Argentina is not only necessary for a proper evaluation of the IBDV control program but also for understanding IBDV epidemiology and evolution. Therefore, the objective of this study was to perform genetic characterization of IBDV from field samples by sequence analysis of critical genomic regions, determining their relationships to phenotypically characterized strains used as references.

Materials and methods

Samples

Samples of bursa of Fabricius (BF) obtained from birds with clinical signs of IBDV infection were submitted from different regions of Argentina (Table 1). The BFs were homogenized in a mortar with sterile sand and PBS supplemented with penicillin (10,000 IU/ml), streptomycin (5000 µg/ml), gentamicin sulfate (1000 µg/ml), kanamycin sulfate (700 µg/ml) and amphotericin B (10 µg/ml) (Sigma Chemical Co., St. Louis, MO, USA). Samples were clarified by centrifugation to eliminate cell debris and sand. The supernatant was collected and stored at −70 °C.

RNA isolation

Total RNA was extracted directly from 140 µl of sample supernatant using a QIAamp Viral RNA Mini Kit (QIAGEN, Valencia, CA, USA), according to the manufacturer's instructions. One negative control was processed along with each group of samples subjected to RNA extraction.

Reverse transcription (RT)

The RT reaction was performed using SuperScript^{TM} III Reverse Transcriptase (Invitrogen, Carlsbad, CA, USA). Briefly, total RNA template was mixed in a 20-µl reaction containing 50 ng of random hexamer primers, 10 mM dNTP mix, 1 µl of 0.1 M DTT, 4 µl of 5X First-Strand Buffer, and 200 units of SuperScript^{TM} III RT. The RT reaction was conducted at 50 °C for 1 h.

Polymerase chain reaction (PCR)

Two different regions were amplified for sequencing. In segment A, a stretch of 343 nucleotides (nt) that spans over the variable region of VP2 was amplified [5]. For segment B a preliminary analysis of published sequences was

Table 1 Field samples taken from flocks with signs of IBDV infection

Samples		Birds		Reported pathogenicity	Accession no.	
Name	Place and year	Age	category		VP2	VP1
A05-BA01	BA[1] – 2005	30 DO[3]	Layers	Low	KM012115	KJ999945
A05-BA02	BA – 2005	49 DO	Layers	Low	KM012116	KJ999946
A06-SA01	Salta - 2006	42 WO[4]	Breeders	High	KM012117	KJ999947
A07-BA01	BA – 2007	42-49 DO	Layers	NR	KM012118	KJ999948
A07-BA02	BA - 2007	NR	NR	NR	KM012119	KJ999949
A07-BA03	BA – 2007	28 DO	Broilers	Low	KM012120	KJ999950
A07-BA04	BA – 2007	34 DO	Broilers	Low	KM012121	KJ999951
A07-BA05	BA – 2007	21DO	Broilers	NR	KM012122	ND
A07-ER01	ER[2] – 2007	40 DO	Broilers	Low	KM012123	KJ999952
A07-ER02	ER – 2007	36 DO	Broilers	Low	KM012124	KJ999953
A07-ER03	ER – 2007	29 DO	Broilers	Low	KM012125	ND
A07-ER04	ER – 2007	27 DO	Broilers	Low	KM012126	ND
A07-ER05	ER – 2007	36 DO	Broilers	Low	KM012127	ND
A07-ER06	ER – 2007	28 DO	Broilers	NR	KM012128	KJ999954
A07-ER07	ER – 2007	30 DO	Broilers	High	KM012129	KJ999955
A07-ER08	ER – 2007	35 DO	Broilers	NR	KM012130	ND
A07-ER09	ER – 2007	NR	NR	NR	KM012131	ND
A07-ME01	Mendoza – 2007	35 DO	Broilers	NR	KM012132	KJ999956
A08-BA01	BA – 2008	36 DO	Broilers	Low	KM012133	ND
A08-BA02	BA – 2008	42 DO	Broilers	Low	KM012134	ND
A08-BA03	BA – 2008	34 DO	Broilers	Low	KM012135	KJ999957
A08-BA04	BA – 2008	35 DO	Broilers	NR	KM012136	ND
A08-BA05	BA – 2008	30 DO	Broilers	High	KM012137	KJ999958
A08-ER01	ER - 2008	42 DO	Broilers	Low	KM012138	ND
A09-BA01	BA - 2009	38 DO	Broilers	Low	KM012139	ND
A09-BA02	BA – 2009	40 DO	Broilers	Low	KM012140	ND
A09-BA03	BA - 2009	40 DO	Broilers	Low	KM012141	ND
A09-BA04	BA - 2009	40 DO	Broilers	Low	KM012142	ND
A09-ER01	ER - 2009	NR	NR	NR	KM012143	ND
A09-ER02	ER - 2009	NR	NR	NR	KM012144	ND
A09-ER03	ER - 2009	39 DO	Broilers	Low	KM012145	KJ999959
A10-ER01	ER - 2010	34 DO	Broilers	Low	KM012146	KJ999960
A10-ER02	ER - 2010	39 DO	Broilers	Low	KM012147	KJ999961
A10-ER04	ER - 2010	NR	NR	NR	KM012148	ND
A10-ER05	ER - 2010	NR	NR	NR	KM012149	ND
A10-ER06	ER - 2010	NR	NR	NR	KM012150	ND
A10-ER07	ER - 2010	NR	NR	NR	KM012151	ND
A10-ER43	ER - 2010	NR	NR	NR	KM012152	ND
A10-RN01	Río Negro - 2010	32 DO	Broilers	Low	KM012153	KJ999962
A11-BA01	BA -2011	NR	NR	NR	KM012154	ND
A11-ER01	ER - 2011	33 DO	Broilers	Low	KM012155	KJ999963
A11-ER02	ER - 2011	25 DO	Broilers	High	KM012156	ND
A11-ER03	ER - 2011	30 DO	Broilers	Low	KM012157	ND
A11-ER04	ER - 2011	28 DO	Broilers	Low	KM012158	ND
A11-ER05	ER - 2011	34 DO	Broilers	Low	KM012159	KJ999964
A11-ER13	ER - 2011	NR	NR	NR	KM012160	ND
A11-ER15	ER - 2011	NR	NR	NR	KM012161	ND

Table 1 continued

Samples		Birds		Reported pathogenicity	Accession no.	
Name	Place and year	Age	category		VP2	VP1
A11-ER16	ER - 2011	NR	NR	NR	KM012162	ND
A11-ER17	ER - 2011	NR	NR	NR	KM012163	ND
A11-ER24	ER - 2011	NR	NR	NR	KM012164	ND
A12-ER01	ER - 2012	35 DO	Layers	High	KM012165	KJ999965
Vaccine I	Winterfield	-	-	Attenuated	KM012166	KJ999966
Vaccine C	ST-12	-	-	Attenuated	KM012167	KJ999967

DO, day-old; WO, week-old; NR, not reported. ND, not done

[1] Buenos Aires province

[2] Entre Ríos province

Table 2 Primers used for amplification and sequencing of regions of segment A and segment B

Primer		Sequence	Position in the genome	Size
A	Fw	5′-CAGGCCCAGAGTCTACACCAT-3′	733-753	343 nt
	Rv	5′-GGAGGTTACTATCTCCAGTTTG-3′	1054-1075	
B	Fw	5′-CAGCAGCGTTCGGCATAAAGCCTAC-3′	155-179	630 nt
	Rv	5′-GTGGCACCCAGGGCTTGTCATCCTCACC-3′	757-784	

A, segment A; B, segment B; Fw, forward; Rv, reverse; nt, nucleotides

performed (data not shown), and a 630-nt region (position 155–784) with potential traits suitable for phylogenetic analysis was selected for amplification and sequencing. The primers for the amplification and sequencing of those regions are shown in Table 2. The PCRs were carried out at a final reaction volume of 50 µl. The PCR mix contained 4 µl of cDNA, 5 µl of 10X reaction buffer (Fermentas Life Sciences, Vilnius, Lithuania), 1 µl of 10 mM dNTPs (Invitrogen, Carlsbad, CA, USA), 3 µl of 25 mM $MgCl_2$, 0.25 µl of 5 U/µl Taq DNA Polymerase (Promega, Madison, WI, USA), 1 µl of each primer (5 µM), and 34.75 µl of nuclease-free water. The cycling program was performed in a thermal cycler (Perkin Elmer 2400 Geneamp PCR System), starting with denaturation (5 minutes, 95 °C), followed by 35 cycles of denaturation (30 s at 95 °C), primer annealing (1 min at 55°C for the VP2 region and 52 °C for the VP1 region), and extension (2 at 72 °C). After a final 10-minute extension at 72 °C, the amplicons were visualized in a 1.5 % agarose gel stained with ethidium bromide. For each run, an internal positive control was used to verify the absence of any kind of inhibitors. At least two independent RT-PCR reactions were produced for each amplicon for all the samples and used for sequencing.

Purification and sequencing of PCR products

The amplified products of the VP1 and VP2 regions were purified using a QIAquick PCR Purification Kit (QIAGEN Inc., Valencia, CA, USA), according to the manufacturer's instructions. The nucleotide sequences of the VP1 and VP2 amplicons were obtained using a Big Dye Terminator Kit (Applied Biosystems, Foster City, CA, USA) for amplification of the products, and the fragment sequences were read on an ABI 3130 XLTM Genetic Analyzer (Applied Biosystems, Foster City, CA, USA). Genomic information was derived from overlapping sequences covered by forward and reverse primers (Table 2).

Sequence analysis

For analysis, the sequences obtained from the amplified areas in segments A and B were edited, and the primer-matching zones were eliminated. A 294-nt region in segment A (regVP2) and a 576-nt region in segment B (regVP1) were used for this study (Table 3). Since only 21 field samples (out of 51) were sequenced in regVP1, we arranged sequences in three groups for our analyses: *i*) VP1 (regVP1 sequences from Argentinean isolates plus the reference sequences), *ii*) VP2a (all of the regVP2 sequences obtained in this study plus references), and *iii*) VP2b (only regVP2 sequences that were obtained from the same 21 samples included in regVP1, plus references). VP2b was used only in those analyses that required a comparison between regions. Since the analysis could be biased if the comparison is performed between groups with different number of sequences, VP2b included sequences from the same samples used for VP1, allowing the comparison between them.

Table 3 Regions in segment A (regVP2) and segment B (regVP1) utilized in this study

Name	Nucleotide sequence		Deduced amino acid sequence	
	Position[1]	Size	Position[2]	Size
regVP2 (segment A)	755-1051	294 nt	210-307	98 aa
regVP1 (segment B)	181-756	576 nt	24-215	192 aa

[1] Each position was estimated from the 5′ extreme of the positive-sense full-length segment

[2] These positions were estimated from the deduced amino acid sequence

The sequences were edited with BioEdit software, version 7.1.3.0 [41]. The generated sequences and other sequences, such as those from vaccines and reference strains obtained from GenBank (Table 4), were included in a multiple alignment made with the CLUSTAL W program, version 1.8.3 [42]. Phylogenetic and molecular evolutionary analyses were conducted using MEGA, version 5 [43]. Pairwise distances were estimated based on nucleotide sequences using the Kimura 2-parameter model [44]. A phylogenetic tree was constructed by the neighbor-joining method. Bootstrap re-sampling of the sequences was carried out to test the robustness of the analysis. The bootstrap values were calculated based on 1000 replicates.

Results

A total of 51 field samples from the main poultry regions of Argentina were analyzed in this work (Table 1). A region of 294 nt in segment A (regVP2) and another region of 576 nt in segment B (regVP1) were amplified for sequencing and comparative analysis of the field samples. The regVP2 sequences were obtained from all 51 field samples, whereas only 21 regVP1 sequences could be successfully amplified for this study. Additionally, two commercial live attenuated vaccines (vaccine I and vaccine C) that are regularly used in this country for immunization programs were sequenced and added in the analysis (Table 1).

Nucleotide sequence analysis

The sequences were aligned using CLUSTAL W software, and the alignments were analyzed as described in Materials and methods. The analysis of Argentinean samples included in the regVP1, regVP2b and regVP2a groups showed 134 (23.26 %), 60 (20.41 %) and 73 (24.83 %) variable positions, respectively. The overall mean genetic distance was 0.091 for VP1, 0.061 for regVP2b, and 0.087 for regVP2a, which indicates greater distances when the analysis was performed on regVP1 than regVP2.

Phylogenetic analysis of regVP2a (based on nucleotides) showed that 42 (of 51 field samples) were in a unique cluster (bootstrap value of 72 %), which in this study we name the csIBDV Argentinean lineage (Fig. 1). This cluster was constituted only by Argentinean sequences, with a mean distance of 0.025 among them. Six other field samples were grouped in a second cluster of classical strains (here named csIBDVb). These samples were close to IM and Cu-1wt (among other reference strains), but in a different phylogenetic group supported by a bootstrap value of 75 (Fig. 1). In this analysis, the sequence from the field sample A08-ER01 showed a high degree of identity to that of vaccine I (genetic distance 0.005), the reference strain CEF94 (0.009), and vaccine C (0.019), all of which were included in the csIBDV cluster (bootstrap value of 66 %). Nucleotide sequence analysis of regVP2a also showed that field samples A06-SA01 and A07-ER07 were in the vvIBDV clade. Despite these sequences being in the same clade, they showed a genetic distance of 0.028. The A06-SA01 was closer to D6948 (0.011) and UK661 (0.016), whereas A07-ER07 was closer to the MB (0.005) and KS (0.016) strains.

Analysis of regVP1 showed two main phylogenetic groups: *i*) the vvIBDV clade (supported by a bootstrap value of 98 %) and *ii*) clade B, constituted by the rest of the serotype 1 strains (supported by a bootstrap value of 90 %), including classical (cs) and antigenic variant (av) strains (Fig. 2). The vvIBDV clade includes field samples A06-SA01 and A07-ER07, as was the case in the regVP2 analysis. The A06-SA01 sequence was closely related to D6948 (0.002), and A07-ER07 was identical to MB and very close to KS (0.005) strains. Analysis of the evolutionary distances between phylogenetic groups showed that the vvIBDV clade is equidistant from clade B (0.152) and the serotype 2 strains OH (0.151) and 23/82 (0.154). The topology of the phylogeny of the VP1 also showed the majority of the field samples falling into a unique cluster, the Argentinean lineage (bootstrap value, 95 %), within the clade B, with a mean genetic distance of 0.036 among them. Other sequences from field samples were grouped with IM strain, close to 9109 and SH95 reference strains (Fig. 2).

Regardless of which segment was analyzed (regVP2 or regVP1), the sequences obtained from field samples segregated similarly in the phylogenetic study. Therefore, no evidence of any reassortment was observed in these Argentinean samples.

Table 4 Sequences used as reference for the analysis

Name	GenBank accession number		Origin	Characteristics	
	Segment A	Segment B			
UK661	X92760	X92761	England (1989)	S1	vv
T09	AY099456	AY099457	Nigeria (1988)	S1	vv
D6948	AF240686	AF240687	Netherland (1989)	S1	vv
Harbin-1	EF517528	EF517529	China (1992)	S1	vv
TASIK	AF322444	AF322445	Indonesia (1994)	S1	vv
UPM94/273	AF527039	AF527038	Malaysia (1994)	S1	vv
BD 3/99	AF362776	AF362770	Bangladesh (1999)	S1	vv
SH95	AY134874	AY134875	China (1995)	S1	cs/vv
KS	DQ927042	DQ927043	Israel (1990)	S1	vv
MB	DQ927040	DQ927041	Israel (199-)	S1	vv
Gz/96	AY598356	AY598355	China (1996)	S1	vv
OKYM	D49706	D49707	Japan (1991)	S1	vv
HK46	AF092943	AF092944	Hong Kong (1994)	S1	vv
ZJ2000	AF321056	DQ166818	China (2000)	S1	cs/vv
Gx	AY444873	AY705393	China (1992)	S1	vv
JD1	AF321055	AY103464	China (1997)	S1	cs
B87	DQ906921	DQ906922	China (-)	S1	cs
Lukert	AY918948	AY918947	USA (196-)	S1	cs
Edgar EP	AY918950	AY918949	USA (196-)	S1	cs
Edgar CC	AY462026	AY459320	USA (196-)	S1	cs
CEF94	AF194428	AF194429	Netherland (1973)	S1	cs
Cu-1wt	AF362747	AF362748	Germany (1975)	S1	cs
Cu-1 M	AF362771	AF362772	Germany (-)	S1	cs
HZ2	AF321054	AF493979	China (1997)	S1	cs
IM	AY029166	AY029165	USA (196-)	S1	cs
9109	AY462027	AY459321	USA (2001)	S1	cs/av
Variant E	AF133904	AF133905	USA (198-)	S1	av
23/82	AF362773	AF362774	Germany (-)	S2	-
OH	U30818	U30819	USA (1982)	S2	-

S1, serotype 1; S2, serotype 2; vv, very virulent; cs, classical strain; av, antigenic variant

Deduced amino acids sequences

The analysis of the deduced amino acid (aa) sequences of regVP2 and regVP1 allowed the identification of many critical residues that constitute particular patterns characteristic of the different clusters. Those critical positions and the characteristic patterns are shown in Table 5. Field samples A07-ER07 and A06-SA01 contain the residues A222, I242, I256, D279, A284, I294, and S299 in regVP2, which are characteristic of the vvIBDV lineage [26]. Interestingly, P222 was present in the deduced aa sequence of some samples (A05-BA01, A05-BA02, A07-BA01, A07-BA02, A08-BA3, and A11-BA01) that were isolated in the same geographic region in the province of Buenos Aires during the period 2005-2011. Proline at position 222 was also present in the sequences of the vaccine strains (C and I) and sample A08-ER01, whereas all of the samples in the Argentinean lineage group had S222. Additionally, there was a significant uniformity of the aa features of the Argentinean lineage, with the exceptions of A07-BA03 and A08-BA04, which contained T284 and N299 instead of A284 and S299, respectively (Table 5). The presence of the residues P289 and F296 was a unique trait only seen in the sequences of the Argentinean lineage. Notably, the residue S254, which is characteristic of avIBDV, was not present in any of the Argentinean samples (data not shown).

The analysis of regVP1 also showed a particular pattern of amino acids for each cluster. Members of the vvIBDV lineage contain E56, N57, I61 T145, D146, and N147, which are present in the sequences of A07-ER07 and A06-SA01 (Table 5), while the Argentinean lineage is characterized by the presence of residues D56, S57, V61, S145, E146, and G147, with one exception, sample A10-ER01

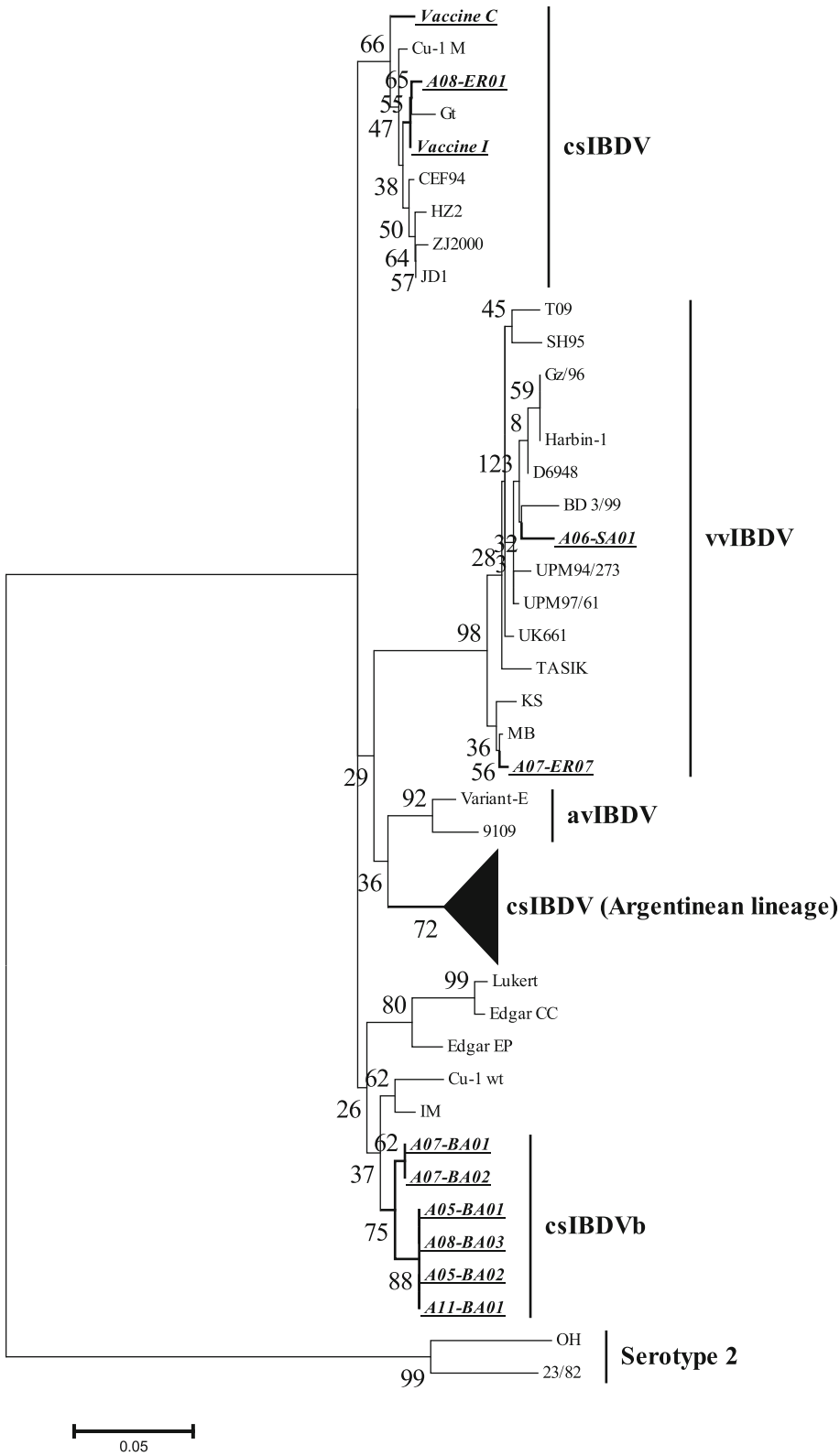

Fig. 1 Phylogenetic tree of regVP2a, constructed by the neighbor-joining method. Forty-two of 51 (82 %) field samples analyzed in this study are included in a cluster named csIBDV Argentinean lineage (shown condensed in the graph). This may represent a genotype that has evolved regionally. Six more field samples are in a second cluster of classical-strain sequences (here csIBDVb)

(N145). The remaining field samples, which were phylogenetically characterized as classical strains (because they grouped with the reference classical strains used in this study), presented another particular aa residue pattern: E56, N57, V61, N145, E146, and D147. That pattern was also seen in the sequences of vaccines C and I, with only one

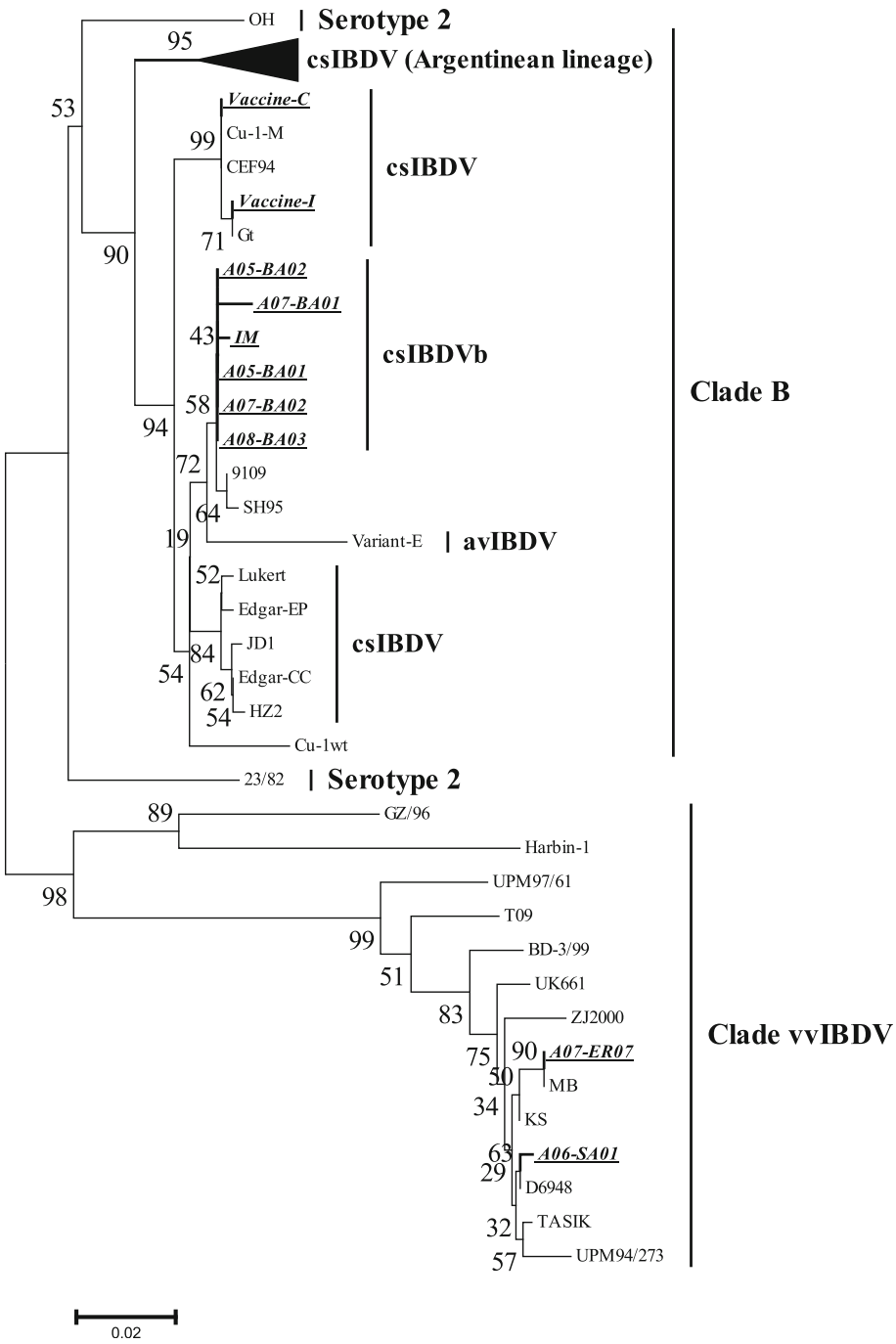

Fig. 2 Two main phylogenic groups are showed in the regVP1 tree: a well-formed vvIBDV clade and clade B, constituted by classical and antigenic variant strains. The phylogenetic tree was constructed by neighbor-joining method

difference at position 147, where there was a G instead of D (Table 5).

Discussion

For years, IBDV has been a big concern in the Argentinean poultry industry. Classical-strain vaccines have been used to control the disease; however, outbreaks of IBDV are frequently observed. Whether the situation is due to failures in the vaccination programs or to the emergence of new strains that are able to break through the protection given by the classical vaccines is unknown. Thus, the genetic characterization of the viruses responsible for the outbreaks that have occurred in the last eight years is necessary to evaluate the control programs, as well as to understand the epidemiology and evolution of IBDV.

The genetic characterization of IBDV isolates is commonly performed on a variable region localized in the VP2 coding area [5]. This region also encodes some amino acids

Table 5 Pattern of aa differences among sequences obtained in this study. Positions were estimated from the first aa of each protein

Samples	regVP2 position[1]													regVP1 position[2]						Genotype
	222	242	245	253	256	270	272	279	284	289	294	296	299	56	57	61	145	146	147	
A06-SA01	A	I	E	Q	I	A	I	D	A	L	I	I	S	E	N	I	T	D	N	vv
A07-ER07	A	I	E	Q	I	A	I	D	A	L	I	I	S	E	N	I	T	D	N	vv
A05-BA01	P	V	E	Q	V	T	I	D	A	L	I	I	N	E	N	V	N	E	D	cs^{b}
A05-BA02	P	V	E	Q	V	T	I	D	A	L	I	I	N	E	N	V	N	E	D	cs^{b}
A07-BA01	P	V	E	Q	V	T	I	D	A	L	**L**	I	N	E	N	V	N	E	D	cs^{b}
A07-BA02	P	V	E	Q	V	T	I	D	A	L	**L**	I	N	E	N	V	N	E	D	cs^{b}
A08-BA03	P	V	E	Q	V	T	I	D	A	L	**L**	I	N	E	N	V	N	E	D	cs^{b}
A11-BA01	P	V	E	Q	V	T	I	D	A	L	I	I	N	nd	nd	nd	nd	nd	nd	cs^{b}
A07-BA03	S	V	G	Q	V	T	T	N	**T**	P	L	F	S	D	S	V	S	E	G	cs^{arg}
A07-BA04	S	V	G	Q	V	T	T	N	A	P	L	F	S	D	S	V	S	E	G	cs^{arg}
A07-BA05	S	V	G	Q	V	T	T	N	A	P	L	F	S	nd	nd	nd	nd	nd	nd	cs^{arg}
A07-ER01	S	V	G	Q	V	T	T	N	A	P	L	F	S	D	S	V	S	E	G	cs^{arg}
A07-ER02	S	V	G	Q	V	T	T	N	A	P	L	F	S	D	S	V	S	E	G	cs^{arg}
A07-ER03	S	V	G	Q	V	T	T	N	A	P	L	F	S	nd	nd	nd	nd	nd	nd	cs^{arg}
A07-ER04	S	V	G	Q	V	T	T	N	A	P	L	F	S	nd	nd	nd	nd	nd	nd	cs^{arg}
A07-ER05	S	V	G	Q	V	T	T	N	A	P	L	F	S	nd	nd	nd	nd	nd	nd	cs^{arg}
A07-ER06	S	V	G	Q	V	T	T	N	A	P	L	F	S	D	S	V	S	E	G	cs^{arg}
A07-ER08	S	V	G	Q	V	T	T	N	A	P	L	F	S	nd	nd	nd	nd	nd	nd	cs^{arg}
A07-ER09	S	V	G	Q	V	T	T	N	A	P	L	F	S	nd	nd	nd	nd	nd	nd	cs^{arg}
A07-ME01	S	V	G	Q	V	T	T	N	A	P	L	F	S	D	S	V	S	E	G	cs^{arg}
A08-BA01	S	V	G	Q	V	T	T	N	A	P	L	F	S	nd	nd	nd	nd	nd	nd	cs^{arg}
A08-BA02	S	V	G	Q	V	T	T	N	A	P	L	F	S	nd	nd	nd	nd	nd	nd	cs^{arg}
A08-BA04	S	V	G	Q	V	T	T	N	A	P	L	F	**N**	nd	nd	nd	nd	nd	nd	cs^{arg}
A08-BA05	S	V	G	Q	V	T	T	N	A	P	L	F	S	D	S	**I**	S	E	G	cs^{arg}
A09-BA01	S	V	G	Q	V	T	T	N	A	-	-	-	-	nd	nd	nd	nd	nd	nd	cs^{arg}
A09-BA02	S	V	G	Q	V	T	T	N	A	P	L	F	S	nd	nd	nd	nd	nd	nd	cs^{arg}
A09-BA03	S	V	G	Q	V	T	T	N	A	-	-	-	S	nd	nd	nd	nd	nd	nd	cs^{arg}
A09-BA04	S	V	G	Q	V	T	T	N	A	P	L	F	S	nd	nd	nd	nd	nd	nd	cs^{arg}
A09-ER01	S	V	G	Q	V	T	T	N	A	P	L	F	S	nd	nd	nd	nd	nd	nd	cs^{arg}
A09-ER02	S	V	G	Q	V	T	T	N	A	P	L	F	S	nd	nd	nd	nd	nd	nd	cs^{arg}
A09-ER03	S	V	G	Q	V	T	T	N	A	P	L	F	S	D	S	V	S	E	G	cs^{arg}
A10-ER01	S	V	G	Q	V	T	T	N	A	P	L	F	S	D	S	V	**N**	E	G	cs^{arg}
A10-ER02	S	V	G	Q	V	T	T	N	A	P	L	F	S	D	S	V	S	E	G	cs^{arg}
A10-ER04	S	V	G	Q	V	T	T	N	A	-	-	-	-	nd	nd	nd	nd	nd	nd	cs^{arg}
A10-ER05	S	V	G	Q	V	T	T	N	A	P	L	F	S	nd	nd	nd	nd	nd	nd	cs^{arg}
A10-ER06	S	V	G	Q	V	T	T	N	A	-	-	-	-	nd	nd	nd	nd	nd	nd	cs^{arg}
A10-ER07	S	V	G	Q	V	T	T	N	A	P	L	F	S	nd	nd	nd	nd	nd	nd	cs^{arg}
A10-ER43	S	V	G	Q	V	T	T	N	A	P	L	F	S	nd	nd	nd	nd	nd	nd	cs^{arg}
A10-RN01	S	V	G	Q	V	T	T	N	A	P	L	F	S	D	S	V	S	E	G	cs^{arg}
A11-ER01	S	V	G	Q	V	T	T	N	A	P	L	F	S	D	S	V	S	E	G	cs^{arg}
A11-ER02	S	V	G	Q	V	T	T	N	A	P	L	F	S	nd	nd	nd	nd	nd	nd	cs^{arg}
A11-ER03	S	V	G	Q	V	T	T	N	A	P	L	F	S	nd	nd	nd	nd	nd	nd	cs^{arg}
A11-ER04	S	V	G	Q	V	T	T	N	A	P	L	F	S	nd	nd	nd	nd	nd	nd	cs^{arg}
A11-ER05	S	V	G	Q	V	T	T	N	A	P	L	F	S	D	S	V	S	E	G	cs^{arg}
A11-ER13	S	V	G	Q	V	T	T	N	A	P	L	F	S	nd	nd	nd	nd	nd	nd	cs^{arg}
A11-ER15	S	V	G	Q	V	T	T	N	A	P	L	F	S	nd	nd	nd	nd	nd	nd	cs^{arg}
A11-ER16	S	V	G	Q	V	T	T	N	A	P	L	F	S	nd	nd	nd	nd	nd	nd	cs^{arg}

Table 5 continued

Samples	regVP2 position[1]													regVP1 position[2]						Genotype
	222	242	245	253	256	270	272	279	284	289	294	296	299	56	57	61	145	146	147	
A11-ER17	S	V	G	Q	V	T	T	N	A	P	L	F	S	nd	nd	nd	nd	nd	nd	cs^{arg}
A11-ER24	S	V	G	Q	V	T	T	N	A	P	L	F	S	nd	nd	nd	nd	nd	nd	cs^{arg}
A12-ER01	S	V	G	Q	V	T	T	N	A	P	L	F	S	D	S	V	S	E	G	cs^{arg}
A08-ER01	P	V	E	**N**	V	T	I	N	T	L	L	I	N	nd	nd	nd	nd	nd	nd	cs
Vaccine I	P	V	E	H	V	T	I	N	T	L	L	I	N	E	N	V	N	E	G	$cs^{attenuated}$
Vaccine C	P	V	E	H	V	T	I	N	T	L	L	I	N	E	N	V	N	E	G	$cs^{attenuated}$

Atypical residues are shown in bold and underlined

vv, very virulent genotype; cs, classical strain genotype; cs^{arg}, Argentinean lineage (genotyped as classical strain); $cs^{attenuated}$, classical strains attenuated genotype; nd, not done

[1] Region of VP2 amplified

[2] Region of VP1 amplified

that have been related to antigenicity, virulence and cell tropism [28, 29, 31–33]. Additionally, it has also been observed that IBDV clusters can be defined based on both genome segments [37, 38]. Therefore, one region (294 nt) located in the coding sequence of VP2 protein (regVP2), and another region (576 nt) in the VP1 protein coding sequence of segment B (regVP1) were selected in this study for the analysis of field samples. The study was performed on 51 field samples obtained from IBDV outbreaks that occurred in Argentina in the period 2005-2012. For comparison purposes, two classical-strain vaccines (live attenuated) that were extensively used during that period were also included in the analysis.

Because only 21 field samples from the VP1 region could be sequenced (out of a total of 51), the analyses involving comparison between regVP1 and regVP2 were performed using a subset of 21 samples (VP1 and VP2b). On the other hand, the analysis of regVP2 that did not include comparison with the VP1 region was carried out with the entire set of samples (VP2a).

Nucleotide sequence analysis did not show a higher variability in regVP2b (20.41 %) than in regVP1 (23.26 %). This is an unexpected result, because VP2 is on the surface of the viral particle and it contains the antigenicity determinants [31] and therefore should be under stronger selection pressure than VP1, which would be associated with greater sequence variability. However, we found no evidence for this in these two subsets of the sequences analyzed.

The phylogenetic analysis performed on the regVP2a sequences showed relatively well-supported, which allowed genotype classification. Thus, clusters corresponding to very virulent strains (vvIBDV), the antigenic variants (avIBDV), and various classical strains (csIBDV) clusters can be clearly seen (Fig. 1). Notably, most of the Argentinean field sample sequences were located in two clusters. The smaller of these, named csIBDVb (which is related to IM and Cu-1wt strains), contains six field samples, whereas the larger (here called the csIBDV Argentinean lineage) comprised more than 82 % of the Argentinean field samples. The robustness of the Argentinean lineage cluster is given by the bootstrap value in the phylogenetic tree (Fig. 1). The amino acid sequences in this cluster had characteristics of the classical strain genotype; however, the phylogenetic tree topology shows the Argentinean lineage to be a separate cluster, apart from other classical-strain genotypes used as references (Fig. 1). The samples that constitute the Argentinean lineage cluster were collected mostly in Buenos Aires and Entre Ríos provinces (where almost 90 % of the Argentinean poultry industry is established); nevertheless, two samples characterized as belonging to the Argentinean lineage were obtained from places located more than 1000 kilometers away from the main poultry areas (Río Negro and Mendoza). This finding indicates that members of the Argentinean lineage are widely distributed in the Argentine territory. Additionally, three more samples (A08-ER01, A06-SA01 and A07-ER07) were in different clusters. A08-ER01 clustered with other csIBDV strains, very close to vaccine I, to which it seems to be related, while the A06-SA01 and A07-ER07 samples were in the vvIBDV cluster, closely related to reference sequences D6948 and MB, respectively.

Furthermore, when phylogenetic analysis was performed on the regVP1 sequences, two main phylogenetic groups were evident; a strongly supported vvIBDV clade and clade B, comprising the rest of the strains (classical and antigenic variants) belonging to serotype 1. These two phylogenetic groups (vvIBDV and clade B) were equidistant from the two serotype 2 strains (OH and 23/82), used here as outgroup sequences. This difference observed in the phylogenetic topologies depended on whether the analysis was performed on VP1 or on VP2 sequences, as has been

reported previously [37]. Interestingly, even though the phylogenetic trees obtained with regVP1 and regVP2 resulted in quite different topologies, the VP1 and VP2 sequences of each Argentinean sample clustered similarly. Thus, no evidence of a reassortment event was detected in this study.

With respect to amino acid (aa) sequence analysis, the regVP2 sequences showed notable similarities in each cluster, particularly when the analysis focused on critical positions (showed in Table 5). The samples A07-BA01, A07-BA02 and A08-BA3 (belonging to the cluster csIBDVb) showed a pattern similar to that of the vaccine strains C and I, differing only at positions 253 (Q/H), 279 (D/N) and 284 (A/T). In this regard, it has been reported that those positions (253, 279 and 284) in the VP2 protein are involved in cell tropism [29, 30] and that position 253 is the only one that is important for virulence [45]. Particularly, Q253 may be required for *in vivo* infection, whereas H253 is involved in cell-culture adaptation [29, 30, 33, 46]. Notably, in this study, almost all field samples contained Q253 (associated with virulence), whereas the vaccine strains I and C had H253 (necessary for cell culture adaptation). Furthermore, the sequence A08-ER01 (closely related to the vaccine strains) contained N at position 253 of VP2. Since residue N253 has been associated with increased virulence [45], this finding suggests that A08-ER01 may represent a revertant derived from a vaccine. Unfortunately, it is not possible to confirm this without the corresponding experiment demonstrating increased virulence of the strain.

Additionally, it has also been suggested that positions 279 and 284 are involved not only in cell tropism but also in virulence. For example, N279 and T284 have been shown to be required for replication in cell culture, whereas D279 and A284 have been reported to be involved in virulence [29, 30, 33]. N279 and T284 may reduce the ability of these viruses to compete *in vivo* with strains that have D279 and A284. This further supports the premise that viruses with N279 and T284 in VP2 may not persist naturally in commercial chicken flocks [45]. Notably, the six field samples in the cluster csIBDVb contained the residues D279 and A284, which are characteristic of pathogenic strains, whereas the samples belonging to the Argentinean lineage cluster have N279, which is required for cell culture replication (attenuated strains). However, members of the Argentinean lineage also contain Q253 and A284, which are characteristic of virulent strains [29, 33]. This could indicate that the Argentinean lineage was derived from a cell-culture-adapted classical strain ancestor that reverted to a more virulent phenotype.

Moreover, the samples belonging to the Argentinean lineage contain some characteristic residues in VP2 that are not common in other strains used as references, for instance, the residues G245, T272, P289 and F296. Those residues were present in four sequences reported in a previous study on Argentinean IBDV isolates [47]. In that report, the samples *S002* (GenBank accession number AM084688), *S003* (accession number AM084689), *B641A34* (accession number AM084695), and *P30903* (accession number AM084694) contained the residues characteristic of the Argentinean lineage. Additionally, there are two more sequences from samples isolated in Puerto Rico and Colombia (accession number AF305739 and DQ916182, respectively), with T272, P289 and F296 [14, 48]. However, even with those critical residues in the Puerto Rican isolate, the sample is not closely related to the Argentinean samples (data not shown). Other Argentinean VP2 sequence reported elsewhere show the classical pattern of the csIBDV Argentinean lineage [48].

On the other hand, samples A06-SA01 and A07-ER07 were characterized in this study as vvIBDV. Even though these samples had the amino acids that are characteristic of the very virulent lineage, they seem to have a different phylogenetic origin. The sample A06-SA01 was isolated from breeders located in the north of the country (Salta province) and is closely related to the D6948 and UK661 strains, isolated in the 1990s in the Netherlands and England, respectively, whereas the sample A07-ER07 is closely related to the sequences KS and MB. The MB strain is an attenuated strain that was obtained from the highly virulent KS strain after several serial passages in chicken embryos [49]. Due to the high level of nucleotide sequence identity (99.32 %) in the regVP2 between A07-ER07 and MB (not shown), it is possible to speculate that A07-ER07 (which was isolated from an outbreak with high mortality) may be a revertant of the MB strain (previously used as a vaccine). Alternatively, A07-ER07 could be the MB strain that was used as a vaccine in a flock already infected with a highly pathogenic IBDV, being wrongly identified as the etiological agent of the outbreak. Unfortunately, no data about vaccines used on the affected flock were available at the time of the study in order to assess this contention. Moreover, amino acid sequence analysis showed that A07-ER07 contained D279, which is necessary for pathogenicity, while MB had N279, which is associated with *in vitro* adaptation to cell culture [29, 32]. This finding supports the hypothesis that A07-ER07 is a revertant derived from the MB strain. Additionally, A07-ER07 also contained isoleucine in position 272, instead of threonine (as seen in MB), but the significance of this difference is unknown.

Notably, the amino acid residues T/Q249, K249 and S254, which have been identified as being critical for the antigenic variant phenotype [30], were not present in regVP2 of any of the Argentinean samples.

Analysis of the deduced amino acids sequences of segment B was performed on residues 19-222 of VP1.

One relevant observation was the presence of the motif TDN (positions 145-147) in the A06-SA01 and A07-ER07 strains. That motif, also present in the vvIBDV strains used as references, could represent a putative marker for the very virulent genotype. Notably, the Argentinean A07-BA01, A05-BA01 and A05-BA02 sequences contained the motif NED at those positions, as seen in SH95, isolated in Shangai, which has been reported to be a reassortant [50]. The rest of the Argentinean sequences contained SEG at positions 145-147 of VP1, while the classical IBDV sequences (used as reference strains in this work), have NEG, including the strains 23/80 and OH belonging to serotype 2. In addition, the samples grouped in the Argentinean lineage contained the residues D56 and S57, instead of E56 and N57, which were seen in the rest of the analyzed sequences. The residue I61, which seems to be characteristically present in the vvIBDV linage (as seen in the reference strains used in this study), was observed not only in the A06-SA01 and A07-ER07 field samples (genetically characterized as vvIBDV) but also in AR08-BA05 (Argentinean lineage).

To summarize, determination of the genetic relationships between IBDV isolates may give new insights into the understanding of the spread of the virus within a country or region. The comparison of viral sequences is a useful tool to study viral evolution and possible recombination and reassortment phenomena, which may have a significant impact on pathogenicity. In this study, there was no evidence of antigenic variants of IBDV present in the Argentinean territory, and no reassortment was detected in the analyzed samples. Although two samples with characteristics of the vvIBDV linage were identified in the present study, this small number is not adequate to assert that the very virulent linage is regularly infecting Argentinean flocks. This is based on the fact that one of these samples (A06-SA01) was isolated in 2006 from breeders in a remote province (far away from the main production area) while the other sample (A07-ER07), isolated in 2007, seems to be derived from the MB strain. Since their isolation, no more viruses belonging to the vvIBDV lineage have been reported in samples from Argentinean commercial birds.

In conclusion, a novel IBDV cluster, the Argentinean lineage was identified in this study. This lineage, which contains a particular pattern of amino acids, has spread widely in recent years, with mild to moderate clinical signs in Argentinean flocks. The analysis of deduced aa sequences suggests that the Argentinean lineage has evolved from a cell-culture-adapted ancestor. These results are useful not only for understanding the IBDV situation in Argentina but also for understanding the regional evolution of the virus.

References

1. Kaufer I, Weiss E (1980) Significance of Bursa of Fabricius as a target organ in infectious bursal disease of chickens. Infect Immun 27(2):364–367
2. Lukert P, Saif Y (2003) Infectious Bursal Disease. In: Saif Y, Glison J, Fadly A, McDougald L, Swayne D (eds) Diseases of Poultry, 11th edn. Iowa State University Press, Ames, pp 161–179
3. Mueller H, Scholtissek C, Becht H (1979) The genome of infectious bursal disease virus consists of two segments of double stranded RNA. J Virol 31(3):584–589
4. Ozel M, Gelderblom H (1985) Capsid symmetry of viruses of the proposed Birnavirus group. Archiv Virol 84(3):149–162. doi:10.1007/bf01378968
5. Bayliss CD, Spies U, Shaw K, Peters RW, Papageorgiou A, Mueller H, Boursnell MEG (1990) A comparison of the sequences of segment A of four infectious bursal disease virus strains and identification of a variable region in VP2. J Gen Virol 71(6):1303–1312. doi:10.1099/0022-1317-71-6-1303
6. Mundt E, Koellner B, Kretzschmar D (1997) VP5 of infectious Bursal disease virus is not essential for viral replication in cell culture. J Virol 71(7):5647–5651
7. Hudson PJ, McKern NM, Power BE, Azad AA (1986) Genomic structure of the large RNA segment of infectious bursal disease virus. Nucleic Acids Res 14(12):5001–5012
8. Spies U, Mueller H, Becht H (1987) Properties of RNA polymerase activity associated with infectious bursal disease virus and characterization of its reaction products. Virus Res 8(2):127–140. doi:10.1016/0168-1702(87)90024-4
9. McFerran JB, McNulty MS, Connor TJ, McCracken RM, Collins DS, Allan GM, McKillop ER (1980) Isolation and serological studies with infectious bursal disease viruses from fowl, turkeys and ducks: demonstration of a second serotype. Avian Pathol 9(3):395–404. doi:10.1080/03079458008418423
10. van den Berg TP, Gonze M, Morales D, Meulemans G (1996) Acute infectious bursal disease in poultry: Immunological and molecular basis of antigenicity of a highly virulent strain. Avian Pathol 25(4):751–768
11. Cosgrove AS (1962) An apparently new disease of chickens-avian nephrosis. Avian Dis 6(3):385–389. doi:10.2307/1587909
12. Jackwood DH, Saif YM (1987) Antigenic diveristy of infectious bursal disease viruses. Avian Dis 31(4):766–770. doi:10.2307/1591028
13. van den Berg TP, Morales D, Eterradossi N, Rivallan G, Toquin D, Raue R, Zierenberg K, Zhang MF, Zhu YP, Wang CQ, Zheng HJ, Wang X, Chen GC, Lim BL, Mueller H (2004) Assessment of genetic, antigenic and pathotypic criteria for the characterization of IBDV strains. Avian Pathol 33(5):470–476
14. Smiley JR, Jackwood DJ (2001) Genetic stability of the VP2 hypervariable region of four infectious bursal disease virus isolates after serial passage in specific-pathogen-free chicken embryos. Avian Dis 45(1):1–8. doi:10.2307/1593005
15. Vakharia VN, He J, Ahamed B, Snyder DB (1994) Molecular basis of antigenic variation in infectious bursal disease virus. Virus Res 31(2):265–273. doi:10.1016/0168-1702(94)90009-4
16. van den Berg TP (2000) Acute infectious bursal disease in poultry: A review. Avian Pathol 29(3):175–194
17. Banda A, Villegas P (2004) Genetic characterization of very virulent infectious bursal disease viruses from Latin America. Avian Dis 48(3):540–549. doi:10.1637/7157-12304r
18. Chen HY, Zhou Q, Zhang MF, Giambrone JJ (1998) Sequence analysis of the VP2 hypervariable region of nine infectious bursal disease virus isolates from Mainland China. Avian Dis 42(4):762–769. doi:10.2307/1592713

19. Hernandez M, Banda A, Hernandez D, Panzera F, Perez R (2006) Detection of very virulent strains of infectious bursal disease virus (vvIBDV) in commercial broilers from Uruguay. Avian Dis 50(4):624–631. doi:10.1637/7530-032306r1.1
20. Ikuta N, El-Attrache J, Villegas P, Garcia M, Lunge VR, Fonseca ASK, Oliveira C, Marques EK (2001) Molecular characterization of Brazilian infectious bursal disease viruses. Avian Dis 45(2):297–306. doi:10.2307/1592968
21. Yamaguchi T, Kasanga CJ, Terasaki K, Maw MT, Ohya K, Fukushi H (2007) Nucleotide sequence analysis of VP2 hypervariable domain of infectious bursal disease virus detected in Japan from 1993 to 2004. J Vet Med Sci 69(7):733–738. doi:10.1292/jvms.69.733
22. Zierenberg K, Nieper H, van den Berg TP, Ezeokoli CD, Voss M, Mueller H (2000) The VP2 variable region of African and German isolates of infectious bursal disease virus: Comparison with very virulent, "classical" virulent, and attenuated tissue culture-adapted strains. Archiv Virol 145(1):113–125. doi:10.1007/s007050050009
23. He C-Q, Ma L-Y, Wang D, Li G-R, Ding N-Z (2009) Homologous recombination is apparent in infectious bursal disease virus. Virology 384(1):51–58. doi:10.1016/j.virol.2008.11.009
24. Snyder DB, Lana DP, Savage PK, Yancey FS, Mengel SA, Marquardt WW (1988) Differentiation of infectious bursal disease viruses directly from infected tissues with neutralizing monoclonal antibodies: evidence of a major antigenic shift in recent field isolates. Avian Dis 32(3):535–539. doi:10.2307/1590924
25. Snyder DB, Vakharia VN, Savage PK (1992) Naturally occurring, neutralizing monoclonal antibody escape variants define the epidemiology of infectious bursal diseases viruses in the United States. Archiv Virol 127(1–4):89–101. doi:10.1007/bf01309577
26. van den Berg TP, Gonze M, Meulemans G (1991) Acute infectious bursal disease in poultry: isolation and characterisation of a highly virulent strain. Avian Pathol 20(1):133–144
27. Brown MD, Green P, Skinner MA (1994) VP2 sequences of recent European 'very virulent' isolates of infectious bursal disease virus are closely related to each other but are distinct from those of 'classical' strains. J Gen Virol 75(3):675–680. doi:10.1099/0022-1317-75-3-675
28. Fahey KJ, Erny K, Crooks J (1989) A conformational immunogen on VP-2 of infectious bursal disease virus that induces virus-neutralizing antibodies that passively protect chickens. J Gen Virol 70(6):1473–1482. doi:10.1099/0022-1317-70-6-1473
29. Yamaguchi T, Ogawa M, Inoshima Y, Miyoshi M, Fukushi H, Hirai K (1996) Identification of sequence changes responsible for the attenuation of highly virulent infectious bursal disease virus. Virology 223(1):219–223. doi:10.1006/viro.1996.0470
30. Brandt M, Yao K, Liu M, Heckert RA, Vakharia VN (2001) Molecular determinants of virulence, cell tropism, and pathogenic phenotype of infectious bursal disease virus. J Virol 75(24):11974–11982. doi:10.1128/jvi.75.24.11974-11982.2001
31. Letzel T, Coulibaly F, Rey FA, Delmas B, Jagt E, van Loon AAMW, Mundt E (2007) Molecular and structural bases for the antigenicity of VP2 of infectious bursal disease virus. J Virol 81(23):12827–12835. doi:10.1128/jvi.01501-07
32. Lim B-L, Cao Y, Yu T, Mo C-W (1999) Adaptation of very virulent infectious bursal disease virus to chicken embryonic fibroblasts by site-directed mutagenesis of residues 279 and 284 of viral coat protein VP2. J Virol 73(4):2854–2862
33. Mundt E (1999) Tissue culture infectivity of different strains of infectious bursal disease virus is determined by distinct amino acids in VP2. J Gen Virol 80(8):2067–2076
34. van Loon AAWM, de Haas N, Zeyda I, Mundt E (2002) Alteration of amino acids in VP2 of very virulent infectious bursal disease virus results in tissue culture adaptation and attenuation in chickens. J Gen Virol 83(1):121–129
35. Yao K, Goodwin MA, Vakharia VN (1998) Generation of a mutant infectious bursal disease virus that does not cause bursal lesions. J Virol 72(4):2647–2654
36. Boot HJ, Hoekman AJW, Gielkens ALJ (2005) The enhanced virulence of very virulent infectious bursal disease virus is partly determined by its B-segment. Archiv Virol 150(1):137–144. doi:10.1007/s00705-004-0405-9
37. Islam MR, Zierenberg K, Mueller H (2001) The genome segment B encoding the RNA-dependent RNA polymerase protein VP1 of very virulent infectious bursal disease virus (IBDV) is phylogenetically distinct from that of all other IBDV strains. Archiv Virol 146(12):2481–2492. doi:10.1007/s007050170018
38. Le Noüen C, Rivallan G, Toquin D, Darlu P, Morin Y, Beven V, de Boisseson C, Cazaban C, Comte S, Gardin Y, Eterradossi N (2006) Very virulent infectious bursal disease virus: reduced pathogenicity in a rare natural segment-B-reassorted isolate. J Gen Virol 87(Part 1):209–216
39. Wei Y, Li J, Zheng J, Xu H, Li L, Yu L (2006) Genetic reassortment of infectious bursal disease virus in nature. Biochem Biophys Res Commun 350(2):277–287. doi:10.1016/j.bbrc.2006.09.040
40. Zierenberg K, Raue R, Nieper H, Islam MR, Eterradossi N, Toquin D, Mueller H (2004) Generation of serotype 1/serotype 2 reassortant viruses of the infectious bursal disease virus and their investigation in vitro and in vivo. Virus Res 105(1):23–34. doi:10.1016/j.virusres.2004.04.009
41. Hall TA (1999) BioEdit: a user-friendly biological sequence alignment editor and analysis program for Windows 95/98/NT. Nucleic Acids Symp Series 41:95–98. http://jwbrown.mbio.ncsu.edu/JWB/papers/1999Hall1.pdf
42. Thompson JD, Higgins DG, Gibson TJ (1994) CLUSTAL W: improving the sensitivity of progressive multiple sequence alignment through sequence weighting, position-specific gap penalties and weight matrix choice. Nucleic Acids Res 22(22):4673–4680
43. Tamura K, Peterson D, Peterson N, Stecher G, Nei M, Kumar S (2011) MEGA5: molecular evolutionary genetics Analysis using maximum likelihood, evolutionary distance, and maximum parsimony methods. Mol Biol Evol 28(10):2731–2739. doi:10.1093/molbev/msr121
44. Kimura M (1980) A simple method for estimating evolutionary rates of base substitutions through comparative studies of nucleotide sequences. J Mol Evol 16(2):111–120. doi:10.1007/BF01731581
45. Jackwood DJ, Sreedevi B, LeFever LJ, Sommer-Wagner SE (2008) Studies on naturally occurring infectious bursal disease viruses suggest that a single amino acid substitution at position 253 in VP2 increases pathogenicity. Virology 377(1):110–116. doi:10.1016/j.virol.2008.04.018
46. Raue R, Islam MR, Islam MN, Islam KM, Badhy SC, Das PM (2004) Reversion of molecularly engineered, partially attenuated, very virulent infectious bursal disease virus during infection of commercial chickens. Avian Pathol 33(2):181–189
47. Remorini P, Calderon MG, Aguirre S, Periolo O, La Torre J, Mattion N (2006) Characterization of infectious bursal disease viruses from Argentina. Avian Dis 50(2):245–251. doi:10.1637/7447-092605r.1
48. Jackwood DJ, Sommer-Wagner S (2007) Genetic characteristics of infectious bursal disease viruses from four continents. Virology 365(2):369–375. doi:10.1016/j.virol.2007.03.046
49. Lazarus D, Pasmanik-Chor M, Gutter B, Gallili G, Barbakov M, Krispel S, Pitcovski J (2008) Attenuation of very virulent infectious bursal disease virus and comparison of full sequences of virulent and attenuated strains. Avian Pathol 37(2):151–159. doi:10.1080/03079450801910206
50. Sun JH, Lu P, Yan YX, Hua XG, Jiang J, Zhao Y (2003) Sequence and analysis of genomic segment A and B of very virulent infectious bursal disease virus isolated from China. J Vet Med Series B 50(3):148–154