Nuclear Instruments and Methods in Physics Research B 318 (2014) 47–50

Contents lists available at SciVerse ScienceDirect

Nuclear Instruments and Methods in Physics Research B

journal homepage: www.elsevier.com/locate/nimb

PIXE facility at Centro Atómico Bariloche

S. Limandri [a], C. Olivares [b], L. Rodriguez [a], G. Bernardi [a,b], S. Suárez [a,c,*]

[a] Consejo Nacional de Investigaciones Científicas y Técnicas de la República Argentina (CONICET), Argentina
[b] Centro Atómico Bariloche, Comisión Nacional de Energía Atómica, Av. E. Bustillo 9500, San Carlos de Bariloche, Río Negro, Argentina
[c] Instituto Balseiro, Universidad Nacional de Cuyo, Av. E. Bustillo 9500, San Carlos de Bariloche, Río Negro, Argentina

ARTICLE INFO

Article history:
Received 12 March 2013
Received in revised form 13 May 2013
Accepted 13 June 2013
Available online 23 July 2013

Keywords:
Accelerator facility
PIXE analysis
Archaeological ceramics
Gunpowder
SDD efficiency

ABSTRACT

A 1.7 MeV tandem accelerator has been recently installed at Centro Atómico Bariloche, Argentina. This communication includes a brief description of the system facility with the main associated equipment, in particular that used for PIXE measurements. The X-ray detector efficiency was experimentally determined by comparing X-ray characteristic spectra with theoretical predictions. The knowledge of this parameter allows us to perform quantification without standards with good precision.

We show some recent applications of PIXE in archaeology and forensic science done at our laboratory. In the archaeological field we determined elements constituent of pastes and black, white, brown and ocher pigments from Aguada Portezuelo Culture (600–900 AD). This study allowed us to infer about the presence of psilomelante mineral (a mineral with barium) as precursor of some black pigments. In the forensic field we determined trace elements that are present in seven gunpowders commonly used in Argentina. We note that any gunpowder can be distinguished by the presence of trace elements.

© 2013 Elsevier B.V. All rights reserved.

1. Introduction

Applications of Particle Induced X-ray Emission Spectroscopy (PIXE) to elemental analysis of materials involving the study of objects from ancient civilizations, trace determination in ceramic pottery, metallic compounds and alloys, teeth, pigments, etc., and numerous other artifacts or samples of biological, medical or environmental interest, have been performed intensively with ion beam facilities provided by electrostatic accelerators [1].

A Tandem accelerator system has been installed in 2010 at Centro Atómico Bariloche (Bariloche, Argentina). The main objective of the new laboratory is to provide techniques involving ion beams in different disciplines and scientific areas. We present a brief description of the system facility with the main associated equipment. In addition, we show some of the recent applications carried out with this facility, particularly those involving PIXE.

2. Experimental set-up

The accelerator system is a NEC Pelletron 5SHD [2] with two negative ion sources: a source of negative ions by Cesium Sputtering (SNICS II) which provides most of the ions, and a RF charge exchange ion source (NEC-Alphatross), mainly used for He beams. A chain of pellets is the responsible of charging the terminal up to 1.7 MV giving, for example, protons in the energy range of 0.6–3.4 MeV and alpha particles up to 5.1 MeV. A schematic diagram of the accelerator and its main characteristics are shown in Fig. 1.

Calibration of the accelerator energy has been performed with several nuclear reactions as $^{16}O(\alpha,\alpha)^{16}O$ and $^{19}F(p,\alpha\gamma)^{16}O$ for several energies.

The main line used for material analysis consists of a RC43 analysis endstation from NEC with setup and detectors for PIXE, PIGE, RBS, ERDA and Channeling techniques. An electrostatic quadrupole quadruplet lens is located at the entrance of the collision chamber which allows focusing the beam into diameters down to 10–20 microns on the sample. The electrostatic microbeam system was provided by NEC. The computer controlled sample holder has a resolution of 0.01° in polar scans. Sample movement around the beam is unlimited in rotation with precision channeling alignment. The sample position is viewed by a CCD camera. The emitted X-rays are detected with a Sirius SD detector (passively cooled silicon drift detector) covered by an ultrathin polymer X-ray window (Moxtek AP3.3) with high transmission for light elements (down to $Z = 4$) and energy resolution better than 140 eV. The detector is located at a distance of 15 cm from the sample, has a 30 mm^2 acceptance window area and an active length of 450 μm. The GUPIX [3] software is used for spectral analysis.

Gamma rays from PIGE are detected with a NaI(Tl) detector (CANBERRA, Scintillation Detector Model 802-2 × 2), whereas backscattered projectiles or particles emitted from nuclear

* Corresponding author at: Consejo Nacional de Investigaciones Científicas y Técnicas de la República Argentina (CONICET), Argentina.
E-mail address: suarez@cab.cnea.gov.ar (S. Suárez).

0168-583X/$ - see front matter © 2013 Elsevier B.V. All rights reserved.
http://dx.doi.org/10.1016/j.nimb.2013.06.058

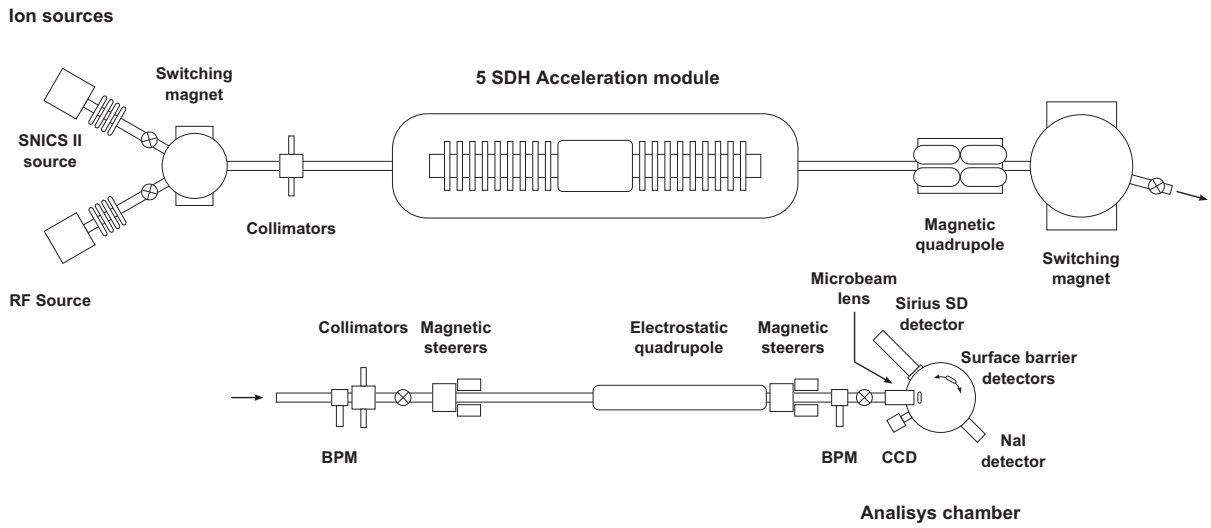

Fig. 1. Schematic view of the accelerator and the line used for material analysis.

reactions are detected with surface barrier detectors (AMETEK, model number: BU-011-050-300) with 11 keV energy resolution.

2.1. X-ray detector characterization

The efficiency is an important feature of an energy dispersive detection system and directly affects the accuracy of quantification without standards. We determined the intrinsic efficiency of our SDD detector in the energy range extended between 0.27 and 25 keV by comparing the characteristic X-ray intensities induced by proton impact on bulk samples with theoretical predictions. A detailed description of the methodology applied as well as the accuracy of quantification with the new efficiency curve is described elsewhere [4,5].

The obtained efficiency values are shown in Fig. 2, alongside an estimation of the obtained efficiency from the product of the window transmission measured by Scholze and Procop [6] and the quantum efficiency provided by the manufacturer. There is a good agreement between our results and the estimation, except for O, where differences around 30% can be observed. At low photon energies the intrinsic efficiency is highly influenced by the absorption in the entrance window; so, this difference can be attributed to uncertainties in the composition of the window polymer.

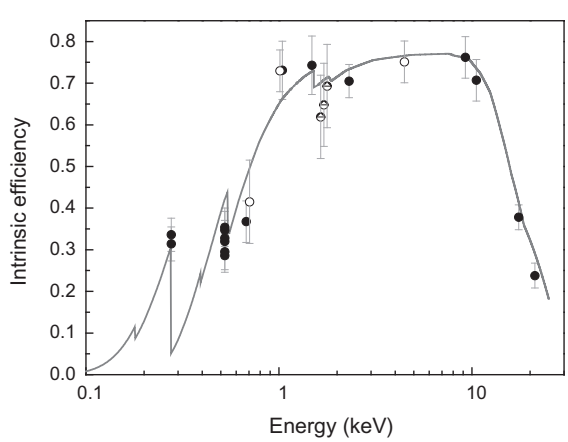

Fig. 2. Intrinsic efficiency of the SDD detector as a function of X-ray energy. Values obtained from the X-ray emission spectra of K (filled circles), L (open circles) and M-lines (half filled circles), and product of the window transmission measured by Scholze and Procop [9] and quantum efficiency provided by the manufacturer (line).

The efficiency obtained from *M* lines has a great uncertainty due to the great dispersion of atomic data related to the *M* shell [7].

3. Applications

Applications involving material characterization are multidisciplinary. Collaborations performed at Centro Atómico Bariloche (CAB) include PIXE analysis of archaeological pottery, necklaces from Tehuelche culture, trout otoliths and bivalves of marine and lacustrine origin, gunpowder, wood, etc. RBS has been used to complement PIXE in several applications, such as the study of multilayer ferromagnetic materials, alloys, solar cells, nuclear fuels, forensic samples, gunshot residues, fuel cells, cement and concrete for use in buildings, etc.

In the next subsections we present two recent PIXE applications performed at CAB. Since a detailed discussion is not possible due to the text length, only the relevant results are shown.

3.1. Archaeology

The study of the elemental composition in objects belonging to the historical heritage is one of the main interests in archaeometry, restoration processes and comprehension of the art history. Those objects are part of the customs, myths and beliefs in the culture of a civilization.

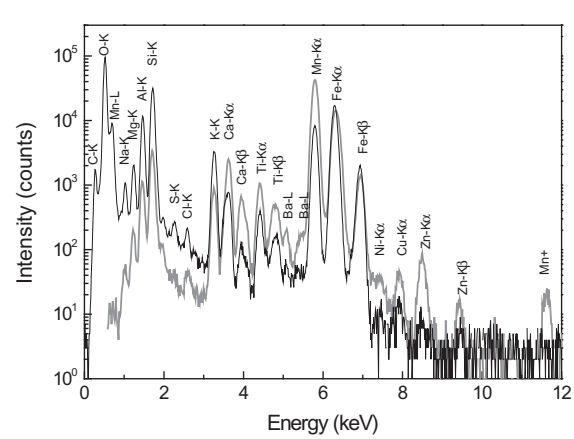

Fig. 3. X-ray emission spectra induced by 2 MeV proton for two black paints corresponding acquired at CAB (black line) and at UFRGS (gray line). The + sign indicates the contribution of the sum peaks.

We determined the elemental composition of paints and pastes of archaeological ceramics from the Aguada Portezuelo Culture (Catamarca Valley, Northwestern Argentina) belonging to the "mid agro-potter period", (ca. 600–900 AD). We obtained PIXE spectra from pastes and also from white, black, brown, reddish and ochre colors at CAB and at the Laboratório de Implantação iônica de la Universidade Federal de Rio Grande do Sul (UFRGS).

In Fig. 3 we show, as an example, two spectra corresponding to black pigments measured in the abovementioned systems. The characteristic X-rays of the elements observed are indicated in the figure. The spectra are different especially at low energies due to the different efficiency associated to each spectrometer. Nevertheless, when the efficiency behavior is properly taken into account, the elemental concentrations for these pigments are similar, except for Mn and some traces (Ba, and Zn) [8]. The detection systems attached to each experimental facility have proper weaknesses and strengths. Our Sirius SD detector permits the detection of light elements (such as C and O), but its efficiency decreases rapidly for energies above 10 keV. So, the detection of, for example, Rb and Sr through their K lines requires long counting times. On the other hand, the Si(Li) detector at UFRGS does not allows to detect elements with $Z < 11$, but the efficiency for energies higher than 10 keV is higher. For these reasons, the measurements carried out in both laboratories can be considered as complementary.

The concentrations of the more representative elements of each color are shown in Fig. 4. The elements associated with white and reddish colors are mainly Ca and Fe, respectively, which agrees with the precursor minerals (calcite and hematite) observed by other authors [9]. Black paints present high amounts of Fe and Mn. In addition, we observed Ba in black pigments with high Mn content. This suggests that psilomelane mineral [$(Ba,H_2O)_2Mn_5O_{10}$] is one of the precursors of the black color. Previous SEM–EDS studies associated the pirolusite mineral (MnO_2) with this color [10]. Those authors did not observe Ba due to the poorer detection limit associated with SEM–EDS. Trace amounts of Cu, Zn, Sr and Rb are observed in most pigments, while Pb is detected in some white colors.

3.2. Forensic science

The analysis of gunshot residues is one of the main interests in forensic science. To understand how the residues are generated it is necessary to consider the components of the cartridge (primer, powder and bullet) and to study the deflagration mechanisms [11]. Trace elements in explosives may be originated by many sources and they can have low or null explosive effect. Nevertheless they could be used to differentiate the year of fabrication, as it was shown by Lane and Wicks for high explosives [12].

We determined by PIXE the elemental composition of unfired gunpowders commonly used in handguns in Argentina. The gunpowders were extracted from cartridges of 9–10 mm and deposited in carbon substrates. A correction was applied to the measured spectra to take into account the substrate contribution [13].

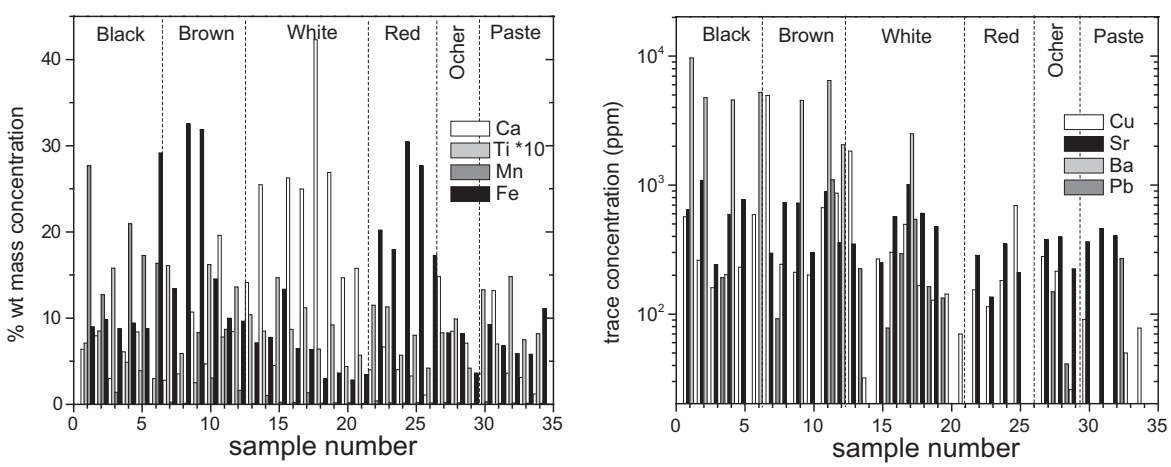

Fig. 4. Mass concentration of some major, minor and trace elements present in the paints and pastes studied.

Table 1
Mass concentrations obtained for the studied gundpowders. The estimated relative errors are 10% for major and 25% for trace elements. FLBFM and FLBFM are military gunpowders whereas the others are commercial gunpowders.

Z		WINMAG	FLBFM	FLB357	GR38SPL	CBC357	FLBFM357	LyB
C	%	57	81.7	81.6	48	87.1	83.3	42
N	%	5.7	5.0	5.7	6.0	5.8	4.4	5
O	%	37	10.1	11.4	45	6.5	11.0	52
Na	ppm	2130	21,100	5260		4600	3900	
Al	ppm	690	510	1250	2500		1260	500
Si	ppm	1150	1720	1790	5300		1000	1080
Cl	ppm	230	4400	240		170	250	
K	ppm	53	40	51	4600	320	2400	2900
Ca	ppm	380	275	600	180	140	180	1600
Fe	ppm	540	210	290	250	27	270	134
Cu	ppm	171	60	66	160	4	198	21
Ba	ppm	28		–	320		175	
Pb	ppm	30		110	220	24	163	

The results obtained are shown in Table 1. Important differences in the intensity of C, O, Pb, Ca, Cl and Ba can be observed. Three of the seven gunpowders analyzed have a C content lower than 60%, whereas the others contain more than 80%. We observed that each gunpowder has particular amounts of trace elements, making them distinguishable.

4. Summary

A 5SDH Tandem Pelletron, with 1.7 MV maximum voltage at terminal, has been recently installed at the Laboratorio de Colisiones Atómicas of the Centro Atómico Bariloche. We have briefly mentioned the main associated equipment and shown some few examples and applications performed with the experimental PIXE facility. A method for determining the SDD efficiency has been implemented for PIXE quantification without standards.

Acknowledgements

We are grateful to the Laboratório de Implantação iônica – UFRGS for invaluable assistance during implementation of IBA techniques. This work was supported by CONICET and CNEA.

References

[1] S.A. Johansson, J.L. Campbell, K.G. Malmqvist, Particle Induced X-Ray Emission Spectrometry (PIXE), John Wiley and sons, Inc., 1995.
[2] NEC, National Electrostatic Corp. www.pelletron.com, 2012 (accessed 8.12.2012).
[3] GUPIXWIN v.2.1 rev. 360. Copyright (C) University of Guelph (2005), J.L. Campbell, N.I. Boyd, N. Grassi, P. Bonnick, J.A. Maxwel, The Guelph PIXE software package IV, Nucl. Intr. Meth. Phys. Res. B 268 (2010) 3356–3363.
[4] L. Rodríguez, S. Limandri, G. Bernardi, S. Suárez. Determinación de la eficiencia de un detector SDD a partir de espectros de emisión de rayos X inducidos por protones, VI Encuentro sudamericano de colisiones inelásticas con la materia, Rosario, Argentina, November 29th–December 1st, 2012, Book of abstracts, (2012) 121–122.
[5] S. Limandri, G. Bernardi, S. Suárez, Experimental study of a SDD X-ray detector efficiency by means of PIXE spectra. Under review in X-Ray Spectrometry (sent on April, 22th 2013).
[6] F. Scholze, M. Procop, Detection efficiency of energy-dispersive detectors with low-energy windows, X-ray Spectrom. 34 (2005) 473–476.
[7] J. Campbell, A Report Prepared for the International Initiative on X-ray Fundamental, University of Canberra, <http://www.canberra.edu.au/irps/archives/vol24no1/xray.pdf>, 2013 (accessed 1.02.2013).
[8] S. Limandri, V. Galván, L. Rodríguez, G. Bernardi, S. Suárez. "Caracterización de cerámicas arqueológicas de la Cultura Aguada (600–900 AdP) mediante PIXE y RBS", VI Encuentro sudamericano de colisiones inelásticas con la materia, Rosario, Argentina, November 29th–December 1st, 2012, Book of abstracts, (2012) 96.
[9] V. Galván Josa, S.R. Bertolino, A. Laguens, J.A. Riveros, G. Castellano, X-ray and scanning electron microscopy archaeometric studies of pigments from the Aguada Culture, Argentina, Microchem. J. 96 (2012) 259–268.
[10] G.A. De La Fuente, N. Kristcautzky, G.Toselliy A. Riveros, Petrología cerámica comparativa y análisis composicional de las pinturas por MEB-EDS del estilo Aguada Portezuelo: una aproximación tecnológica para su estudio en el Valle de Catamarca (Catamarca, NOA), Estudios Atacameños 30 (2005) 61–78.
[11] G.M. Wolten, R.M. Nesbitt, On the mechanism of gunshot residue particle formation, J. Forensic Sci. 25 (1980) 533–545.
[12] D.W. Lane, D.C. Wicks, PIXE, a new technique for the trace element analysis of high explosives, Nucl. Instr. Methods Phys. Res., Sect. B 161–163 (2000) 792–796.
[13] S. Limandri, L. Rodriguez, S. Arrollo, G. Bernardi, S. Suárez. Análisis de la composición de pólvoras mediante las técnicas PIXE y RBS, VI Encuentro sudamericano de colisiones inelásticas con la materia, Rosario, Argentina, November 29th–December 1st, 2012, Book of abstracts (2012) 94–95.