ELSEVIER

Computers and Chemical Engineering 24 (2000) 983–989

Computers & Chemical Engineering

www.elsevier.com/locate/compchemeng

Large-scale dynamic optimization of a low density polyethylene plant

A. Cervantes [b,*], S. Tonelli [a], A. Brandolin [a], A. Bandoni [a], L. Biegler [b]

[a] *Planta Piloto de Ingenieria Quimica, PLAPIQUI (UNS-CONICET), Camino La Carrindanga Km. 7. 8000, Bahia Blanca, Argentina*
[b] *Chemical Engineering Department, Carnegie Mellon University, Pittsburgh, PA 15213, USA*

Abstract

This paper presents the optimal control policy of an industrial low-density polyethylene (LDPE) plant. Based on a dynamic model of the whole plant, optimal feed profiles are determined to minimize the transient states generated during the switching between different steady states. This industrial process produces LDPE by high-pressure polymerization of ethylene in a tubular reactor. The plant produces different final products. The model consists of two parts, the first one corresponds to the reactor and the second to the rest of the plant. The process has many time delays that are also incorporated into the optimization model. The resulting differential algebraic equation (DAE) plant model includes over 500 equations. The continuous state and control variables are discretized by applying orthogonal collocation on finite elements. The resulting NLP is solved with a reduced space interior point algorithm. The paper studies two cases of switching among different polymer grades determining the optimal butane flow rates, in order to minimize the time to reach the steady state operation corresponding to the desired new product quality.

Keywords: Large-scale; Optimization; Polyethylene plant

1. Introduction

The production of LDPE is a typical process where unsteady states are part of the normal operation of the plant. To obtain low-density polyethylene (LDPE) of different grades, in addition to the normal disturbances of any process, programmed variations are originated when operators change product specifications by switching between different steady states. Off specification products could be decreased if the plant operators would use profiles for the manipulated variables that are obtained through an optimization procedure. Different optimization objectives could be used, where a common performance criterion is the difference between the current profile and the new desired steady state. To deal with this type of problem in a systematic way, it is necessary to develop and optimize an adequate dynamic model for the process with the right objective function.

In this work, we develop a dynamic model for the entire plant based on a reformulation of a simplified nonlinear model for the plant (Schbib, Tonelli, Brignole & Romagnoli, 1992), and a dynamic version of a rigorous steady-state reactor model by Brandolin, Lacunza, Urgin and Capiati (1996). The model is posed as a dynamic optimization problem to obtain optimal profiles for manipulated variables. The dynamic optimization problem is transformed into a nonlinear programming problem (NLP) by collocation on finite elements, and the resulting NLP problem is solved with a novel, recently developed interior point strategy applied in the reduced space.

In the next section, we present a brief description of the LDPE process and a detailed explanation of the process models. Section 3 describes the solution procedure, while results are presented in Section 4. Conclusions and future directions are described in Section 5.

2. LDPE process description and model

The industrial process under study (Fig. 1) produces 90 000 tons/year of LDPE by high-pressure polymerization of ethylene in a tubular reactor, using oxygen

* Corresponding author.

0098-1354/00/$ - see front matter
PII: S0098-1354(00)00416-6

and peroxide initiators. The fresh ethylene feed is mixed with a purified low-pressure recycle stream, oxygen and butane, and then compressed until about 250 bars in a multi-stage primary compressor. This stream is mixed with the high-pressure recycle, further compressed in a hypercompressor up to the reaction pressure of around 2000 bars, and continuously fed to a jacketed tubular reactor, where the ethylene is partially polymerized producing polyethylene of different grades. Two additional feeds of organic peroxide are allocated at two different axial positions, producing two reaction zones with sharp temperature and conversion increases.

The mixture from the reactor output is expanded in a letdown valve and fed to a series of high-low pressure separators where the polymer is obtained. The ethylene is cooled and dewaxed prior to being recycled. The polymer is obtained from the low-pressure separator and fed into an extruder to be pelleted, cooled and finally sent to storage.

Normal plant operation requires changes from one steady state to another to switch among different final products. This can be accomplished by changing the butane feed flow rate and/or the purge flow rate from the precompressor. These changes generate disturbances that keep the product out of specifications during the transient states.

2.1. Plant model

The plant model includes four components: ethylene ($j=1$), butane ($j=2$), methane ($j=3$) and impurities ($j=4$). During the usual plant operation the equipment temperature and pressure are strictly controlled. Therefore their variations are not significant. For this reason, the moment and energy balances were not taken into account in the mathematical model proposed. Based on the realistic assumption that the dynamics of the total mass balances is much faster than that of the component mass balances, constant equipment holdups are considered.

Each process unit of the flowsheet was represented as a continuous stirred tank (CST). The continuity equation for the jth component is:

$$\frac{d(V\rho w^j)}{dt} = Fw_i^j - Fw^j \qquad j=1\ldots4 \tag{1}$$

where: V = equipment volume (m^3), F = mass flowrate (kg/h), ρ = gas density (kg/m^3), w_i^j = inlet weight composition of the jth component. w^j = outlet weight composition of the jth component.

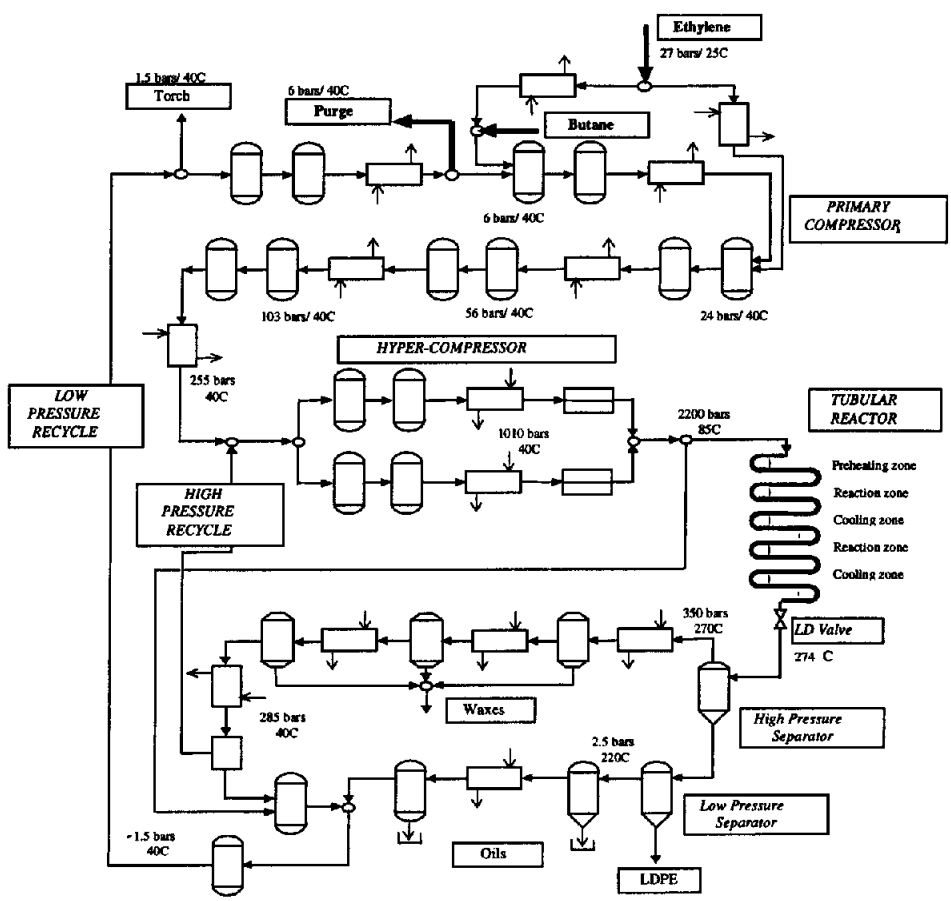

Fig. 1. LDPE process flowsheet.

Another aspect of this process is the presence of several time delays. In a previous study (Cervantes, Tonelli, Bandoni & Biegler, 1998) a first order Padé approximation in the space of state variables was used to model the delays and incorporated in the plant model. In this work, a different and tighter method is applied for the time delay prediction. Here time delays are directly incorporated into the plant model by assigning to each one a tube of length L, where a plug flow is assumed. The resulting component material balances for these tubes are as follows:

$$\frac{\partial w^j}{\partial t} + \frac{F}{r \cdot A}\frac{\partial w^j}{\partial z} = 0$$
$$\frac{\partial w^j}{\partial z}(L) = 0; \quad w^j(z, 0) = w_0^j \tag{2}$$

These equations are discretized using a backward difference equation in z, with $N = 10$ intervals. Based on a dynamic analysis of the process behavior, the many delays present in the whole plant were lumped into only six time delays, but retaining the global dynamic plant behavior by an appropriate selection of their location.

2.2. Reactor model

The dynamic model for the reactor was built on the basis of a previous rigorous steady-state model (Brandolin et al., 1996). The rigorous model considers multiple monomer feeds and multiple injections of initiators and chain transfer agents at different locations through the axial length, along with realistic jacket flux configurations.

For this work, several simplifying assumptions were applied to convert the former steady-state model to a dynamic model suitable for optimization purposes. In the context of the dynamic optimization of the whole plant, the main quantities to be provided by the model were conversion, temperature, component compositions and number average molecular weight (Mn). This last quantity represents the average mass of monomer incorporated into each mole of polymer product. It was ensured that the same steady-state condition is obtained when the dynamic model is run from time zero to infinity, and when the non-linear algebraic equations resulting from eliminating the time derivatives are solved. The reactions that only affect molecular properties other than Mn were not considered at this stage of the work. The final selected kinetic mechanism was:

Peroxide (I_j) initiation

$$I_j \xrightarrow{f_j k_{dj0}} 2R(0); \quad j = 1, 2$$

Oxygen initiation

$$O_2 + M \xrightarrow{k_o} 2\,R(0)$$

Propagation

$$R(x) + M \xrightarrow{k_p} R(x+1)$$

Termination by combination

$$R(x) + R(y) \xrightarrow{k_{tc}} P(x+y)$$

Thermal degradation

$$R(x+1) \xrightarrow{k_{tdt}} P(x) + R(0)$$

Chain transfer to butane

$$R(x) + S \xrightarrow{k_{trs}} P(x) + R(0)$$

where $P(x)$ and $R(x)$ are polymer and radical molecules which contain 'x' monomer units. The oxygen and peroxide initiators are injected to the reactor and consumed totally there. Radicals are generated and consumed only in the reactor. As a consequence these three species are considered only in the reactor model.

The reactor was divided in six jacket sections. The first section is used to preheat the reaction mixture. In the second section radicals generated by oxygen propagate. Two peroxide initiators are injected at the third and fifth sections generating two reaction zones, respectively. The fourth and sixth sections are used for cooling purposes. Each of these sections is modeled as a PF reactor. We used uniform global heat transfer coefficients (U), specific heat (Cp), density (ρ), jacket temperature (T_j), and jacket pressure at each section. No balances for the jacket side were necessary. To simplify pressure calculations on the reaction side we used information from the rigorous model to propose a linear variation of pressure along the reactor. Eqs. (3)–(11) are applied for each one of the jacket sections ($k = 1, 6$) in which the reactor was divided: the dimensional variables were converted to a proper dimensionless form. Then, to incorporate the model into the optimization framework, the space coordinate z was discretized using backward finite differences. This discretization was not uniform; shorter intervals were taken after initiator injections since the rate of change of the variables increases significantly.

Temperature equation

$$\frac{\partial T(z,t)}{\partial t}(k) = \frac{1}{\rho(k)Cp(k)}\left\{ -v(k)\rho(k)Cp(k)\frac{\partial T(z,t)}{\partial z}(k) + \left(-k_p(z,t)w^8(z,t)(k)w^1(z,t)\frac{\rho(k)}{\mathrm{Mw}_m}(-\Delta H) - U(k)4(T(z,t) - T_j(k)) \right) \Big/ D_i \right\} \tag{3}$$

Ethylene (w^1) balance

$$\frac{\partial w^1(z,t)}{\partial t}(k) = -v(k)\frac{\partial w^1(z,t)}{\partial z} - k_p(z,t)w^8(z,t)\ \rho(k)w^1(z,t) - k_o(z,t)w^5(z,t)^{1.1}\frac{\rho(k)^{1.1}}{\mathrm{Mw}_{ox}^{1.1}}w^1(z,t) \quad (4)$$

Butane (w^2) balance

$$\frac{\partial w^2(z,t)}{\partial t}(k) = -v(k)\frac{\partial w^2(z,t)}{\partial z} - k_{trs}(z,t)w^8(z,t)\rho(k)w^2(z,t) \quad (5)$$

Oxygen (w^5) balance

$$\frac{\partial w^5(z,t)}{\partial t}(k) = -v(k)\frac{\partial w^5(z,t)}{\partial z} - k_o(z,t)w^5(z,t)^{1.1}\frac{\rho(k)^{0.1}}{\mathrm{Mw}_{ox}^{0.1}}w^1(z,t)\frac{\rho(k)}{\mathrm{Mw}_m} \quad (6)$$

Radical (w^8) balances

$$0 = -v(k)\frac{\partial w^8(z,t)}{\partial z} + \sum_{j=1}^{2} 2f_j k_{dj} w^{7,j}\frac{1}{\mathrm{Mw}_{in,j}} + k_o(z,t)w^5(z,t)^{1.1}\frac{\rho(k)^{1.1}}{\mathrm{Mw}_{ox}^{1.1}}w^1(z,t)\frac{1}{\mathrm{Mw}_m} - k_{tc}(z,t)w^8(z,t)^2\rho(k) \quad (7)$$

Global polymer (w^6) balance

$$\frac{\partial w^6(z,t)}{\partial t}(k) = -v(k)\frac{\partial w^6(z,t)}{\partial z} + 0.5k_{tc}(z,t)w^8(z,t)^2\rho(k) + k_{trs}(z,t)w^2(z,t)\frac{\rho(k)}{\mathrm{Mw}_s}w^8(z,t) + k_{tdt}(z,t)w^8(z,t) \quad (8)$$

Peroxide (w^7) balances

$$0 = -v(k)\frac{\partial w^{7,j}(z,t)}{\partial z} + k_{dj}(z,t)w^{7,j}(z,t) \qquad j=1,2 \quad (9)$$

The initial and boundary conditions may be expressed as:

$$t=0 \quad w^j(z,0) = w_0^j(z); \quad T(z,0) = T_0(z) \quad (10)$$

$$z=0 \quad w^j(0,t) = w_0^j(z); \quad T(0,t) = T_{z=0} \quad (11)$$

where $j = 1, 2, 5\ldots8$.

3. Dynamic optimization problem

In this type of plant, a common practice to infer the final product quality is to measure the composition of butane in the low-pressure recycle stream. Therefore, as a performance criterion for the dynamic optimization problem, we selected the deviation of this variable respect to the desired set point.

In order to account for the minimum switching time between two steady states, the time weighted integral error function was selected to be used as the objective function. As the manipulated variable, the butane feed and the purge stream profiles are used.

In Eq. (12) z is the vector of differential variables, y is the vector of algebraic variables and u is the control variable which represents the butane feed to the plant.

$$\min \int_o^{t_f} (x_{bu} - x_{bu}^{set})^2\, dt$$

$$s.t. \quad \text{DAE model (3-11)}$$

$$\begin{aligned} z(t=0) &= z^0 \\ z^l \le z &\le z^u \\ y^l \le y &\le y^u \\ u^l \le u &\le u^u \end{aligned} \quad (12)$$

Adding a new differential variable to the problem we can write it in Mayer form, where the objective function becomes

$$\min z_{new}(t_f) \quad (13)$$

The continuous state and control variables are discretized by applying orthogonal collocation on finite elements and the resulting NLP is solved with a decomposed barrier (or interior point) algorithm. In the remainder of this section we briefly present the basic characteristics of this approach.

3.1. Discretization

The continuous dynamic optimization problem is discretized by applying collocation on finite elements. We use a monomial basis representation for the differential profiles.

$$z(t) = z_{i-1} + (t - t_{i-1})\sum_{q=1}^{ncol} \Omega_q\left(\frac{t - t_{i-1}}{h_i}\right)\frac{dz}{dt}^{i,q} \quad (14)$$

where z_{i-1} = value of the differential variable at the beginning of element i, h_i = length of element i, $dz/dt_{i,q}$ = value of its first derivative in element i at the collocation point q, and Ω_q = a polynomial of order $n$col.

The control and algebraic variables are approximated by

$$y(t) = \sum_{q=1}^{ncol} \psi_q\left(\frac{t - t_{i-1}}{h_i}\right)y_{i,q} \quad (15)$$

$$u(t) = \sum_{q=1}^{ncol} \psi_q\left(\frac{t - t_{i-1}}{h_i}\right)u_{i,q} \quad (16)$$

where $y_{i,q}$ and $u_{i,q}$ represent the values of the algebraic and control variables, respectively, in element i at collocation point q. Here, ψ_q is a Lagrange polynomial of order $n$col. The differential variables are required to be

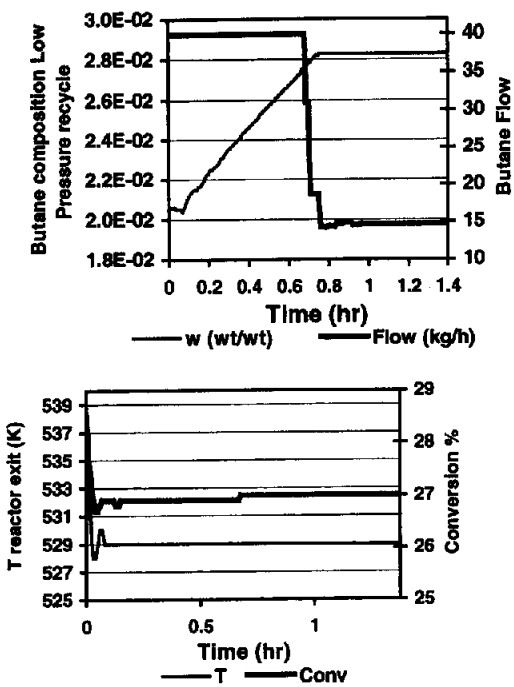

Fig. 2. Optimal control and state profiles: Case 1.

continuous throughout the time horizon, while the control and algebraic variables are allowed to have discontinuities at the boundaries of the elements. Fixing the number and the length of the elements, and the number of collocation points the substitution of Eqs. (14)–(16) into (12) leads to the following NLP.

$$\min f(x) \tag{17}$$

$$\begin{aligned} \text{s.t} \quad & c(x) = 0 \\ & x^l \le x \le x^u \end{aligned} \tag{18}$$

where x is the vector of discretized variables

$$x = \left[z_i \frac{\mathrm{d}z_{i,q}}{\mathrm{d}t} y_{i,q} u_{i,q} \right]^T \tag{19}$$

3.2. Barrier method

The NLP problem (Eqs. (17)–(19)) is solved using a reduced space barrier method (Cervantes, Waechter, Tutunca & Biegler, 1999). This method has proved to be very efficient for solving DAE optimization problems, especially when the dimension of the state variables is much larger than that of the control variables. The method also adds robustness to the solution procedure by performing local factorizations.

Without loss of generality and in order to simplify the presentation of the algorithm the NLP problem (17)–(18) can be written as

$$\min f(x) \tag{20}$$

$$\begin{aligned} \text{s.t} \quad & c\ (x) = 0 \\ & x \ge 0 \end{aligned} \tag{21}$$

This approach replaces the bound constraints with a logarithmic barrier term, which is added to the objective function. By introducing strictly positive slack variables, the problem can be written as

$$\min \varphi_\mu(x) = f(x) - \mu \sum_{i=1}^{n} \ln (s^i) \tag{22}$$

$$\begin{aligned} \text{s.t} \quad & c\ (x) = 0 \\ & s - x = 0 \end{aligned} \tag{23}$$

where $\mu > 0$ is a barrier parameter. The algorithm solves a sequence of barrier problems (Eqs. (22) and (23)) for decreasing values of μ. It is clear that as μ goes to zero, the solution of the barrier problem will converge to the solution of the original NLP.

The solution of each barrier problem is obtained following a reduced space approach, where the overall step is partitioned into a range and null space components. For this, the variables are partitioned into m dependent and $(n-m)$ independent variables. The step for the dependent variables is obtained by solving a square linear systems of equations, while the step for the independent variables corresponds to the solution of a unconstrained QP. Details of this algorithm along with an extensive performance evaluation are given in Cervantes et al. (1999).

4. Results

The above plant model leads to a system with 532 differential-algebraic equations. To capture the dynamics of the reactor model adequately, three collocation points were required and up to 40 finite elements were needed in the discretization process. The resulting problem was solved using our interior point algorithm running on a Dec Alpha 500.

We analyze two different product grade transitions (Cases 1 and 2), to show the capabilities of the developed large-scale optimization model. Cases 1 and 2 correspond to a decrease and to an increase in molecular weight, respectively. We also compare the results of Case 1 with the ones obtained with the previous simplified model (Cervantes et al., 1998). In this model the reactor was treated as a black box by fixing the conversion at a value obtained from plant data. In all cases, we started with the same initial steady state condition (see Fig. 1) corresponding to a conversion of 28.5%.

For Case 1, 35 finite elements and three collocation points were required in the discretization process, leading to a nonlinear program with 73 425 variables. A number of 154 iterations and 4366.2 CPUs were required to achieve convergence.

Fig. 2 presents the optimal profile of the fresh butane flow that minimize the transition time from the initial to a final steady state, which is characterized by a polymer of lower molecular weight. The other operating process conditions remained unchanged. It is observed from the figure that the optimal profile for the butane flow is almost a piecewise constant function, consisting of taking the initial steady state flow to its upper bound, keeping it for 0.8 h and then lowering it to its final steady state value. This manipulation produces a linear increase in the concentration of butane in the low pressure recycle. This leads to an increment of butane concentration in the reactor favoring chain transfer reactions. These reactions are responsible for the decrease in average molecular weight. The model also predicts a much faster reactor dynamics than that of the global plant, as it is usually in actual plants, as can be seen in Fig. 2.

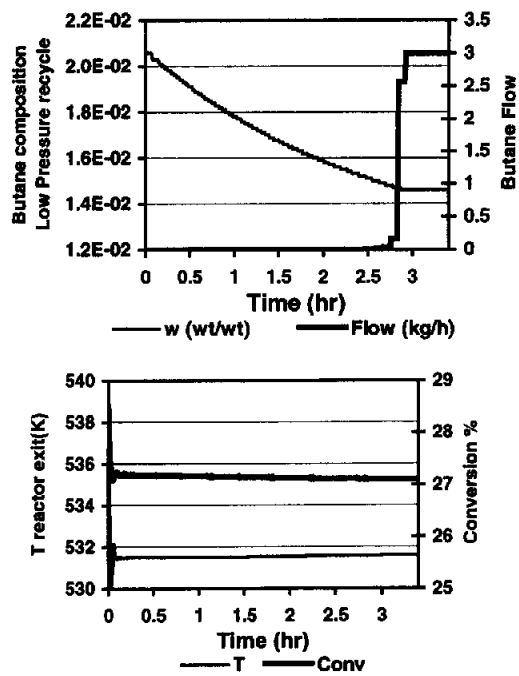

Fig. 3. Optimal control and state profiles: Case 2.

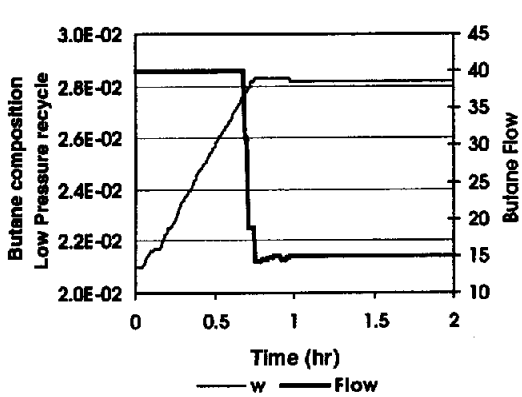

Fig. 4. Simplified model control profile for Case 1.

In Case 2, we seek a transition to increase the molecular weight. A number of 40 finite elements and three collocation points were required, leading to a nonlinear program with 83 845 variables. The interior point algorithm required 126 iterations and 3728.4 CPUs.

Fig. 3 shows that the optimum butane flow profile that leads to an increase in molecular weight must start at a low value for more than 2.5 h and then be raised to its final steady state value. This manipulation produces a linear decrease in butane concentration at the low pressure recycle. Butane composition also decreases in the reactor making the chain transfer reaction less significant; the product molecular weight increases accordingly.

The time delay effects on the process variables profiles for both cases is evident from Figs. 2 and 3. For both cases, a large part of the computation times are taken up by calculation of the derivative information for the reactor and plant models. For this study, these were obtained by finite difference perturbations.

Lastly, we consider the results of Cervantes et al. (1998) where a simplified black box reactor with fixed conversion was used in the plant model. Please note that the optimal control policies with the incorporation of the reactor model are very close to those with a fixed conversion reactor model, as shown below in Fig. 4.

In our previous study the model with 156 differential equations and 64 algebraic equations was discretized with three collocation points on 15 finite elements, resulting in an NLP with 12 396 variables and 12 366 equality constraints. The algorithm obtained an optimal solution in 81 iterations and 418.1 CPUs.

The simplified model was run using conversion data from plant measurements. On the other hand, the detailed reactor model is able to predict appropriately the actual reactor behavior in a wide range of operating conditions, and consequently it improves the model predictive capabilities for key plant variables such as conversion, temperature profiles and molecular weights.

The optimal control policies presented above led to a significant savings in transition times, which in the actual plant is about 5 h. Using the optimal profiles presented here we were able to reduce this transition time to 1.6 h. Applied at each grade transition, this translates to a reduction of 16.4 tons of off-spec product.

5. Conclusions

Optimal control policies are derived for grade transition problems for a large-scale LDPE plant model. Using orthogonal collocation on finite elements to represent the DAE model and a novel interior point method for solving the resulting nonlinear program, we

obtain the solution of problems with over 80 000 variables. Moreover, the resulting solutions lead to a reduction in the transition time (and of off-spec LDPE product) of over 30%. Future work will deal with more efficient model formulations, accurate gradient calculations from the model and large-scale extensions to this plant.

Acknowledgements

PLAPIQUIs authors acknowledge the financial support of CONICET and UNS. CMUs authors acknowledge a fellowship for A. Cervantes from the UNAM and support from the US NSF.

References

Brandolin, A., Lacunza, M. H., Ugrin, P. E., & Capiati, N. J. (1996). High pressure polymerization of ethylene. An improved mathematical model for industrial tubular reactors. *Polym. Reaction Engineering*, *4*, 193–241.

Cervantes, A., Tonelli, S., Bandoni, A., & Biegler, L. (1998). Optimal switching between steady-states in low density polyethylene plant, Paper 236g, *American Institute of Chemical Engineering Annual Meeting*. Miami, FL.

Cervantes, A., Waechter, A., Reha, T., & Biegler, L. T. (1999). A reduced space interior point strategy for optimization of differential algebraic systems, submitted for publication.

Schbib, S., Tonelli, S., Brignole, E., & Romagnoli, J. (1992). Linearized dynamic model of an industrial low density polyethylene plant. *Computers & Chemical Engineering*, *17S*, S323–S328.