Evaluation of a CO_2-free commercial mosquito attractant to capture triatomines in the laboratory

F. Guidobaldi[1]✉ and P.G. Guerenstein[1,2]

[1]*Laboratorio de Neuroetología Ecológica, CICyTTP-CONICET, Diamante, Entre Ríos, Argentina, fabioguidobaldi@cicyttp.org.ar*
[2]*Facultad de Ingeniería, UNER, Oro Verde, Entre Ríos, Argentina*

Received 15 February 2013; Accepted 18 April 2013

ABSTRACT: Efforts have been made to develop vertebrate odor-based attractants to lure hematophagous triatomines into traps. However, more work is needed to reach a practical, cheap, and efficient odor lure. We carried out attraction and capture tests in a dual-choice olfactometer and a pitfall trap. Here we report that a three-component, CO_2-free, synthetic blend of vertebrate odor (consisting of ammonia, L(+) lactic acid and hexanoic acid, and known as Sweetscent®) significantly induces 3rd-instar *Rhodnius prolixus* and *Triatoma infestans* nymphs to fall into the test capture-tube of the olfactometer. Blend constituents presented singly or in two-component blends did not evoke a response and, therefore, we propose that the insects respond specifically to the three-component blend in a synergistic way. When tested in a pitfall trap in an experimental arena, this blend induced capture in 37.5% of the lured traps, whereas 9% of the nymphs tested were captured in a single night. No insects were captured in control traps. Our work represents a proof-of-concept regarding capture of triatomines using host odor-based, CO_2-free synthetic mixtures as lures for pitfall traps. CO_2-free lures are more practical for field work than natural or CO_2-containing synthetic blends. ***Journal of Vector Ecology* 38 (2): 245-250. 2013.**

Keyword Index: Chagas disease, triatominae, attractant, vector control, odor lure, trap.

INTRODUCTION

Triatomines (*Hemiptera: Reduviidae*), also known as kissing bugs, are insects that feed on the blood of vertebrates. These insects are vectors of the flagellate protozoan *Trypanosoma cruzi* Chagas, the causative agent of Chagas disease. Two of the epidemiologically most important species are *Rhodnius prolixus* Stal and *Triatoma infestans* Klug (Schofield 1994). Vector control is the most effective method to prevent Chagas disease (WHO 2010).

Triatomines are nocturnal and often domiciliated. During the day, domiciliated species hide in refuges, located in crevices in the ceiling and walls of houses, where they remain inactive. At night, when their hosts are resting, the bugs become active. If at that time host odors are present, locomotor activity increases beyond spontaneous levels (Guerenstein and Guerin 2001, Taneja and Guerin 1997). In an effort to find the odor source, hungry insects often walk on the ceiling. In a human dwelling, volatile odorants released by a resting host are mainly transported by convection currents that reach the ceiling. In this context, the stimulation of the triatomine olfactory receptors by host odors coming from below triggers a characteristic behavior: the bugs let themselves fall onto the host (Guerenstein et al. 1995).

It has been established that triatomines are attracted by the natural, complex odor blend emanating from their hosts (Núñez 1987, Ortiz and Molina 2010) and by single synthetic host odors including CO_2 (Barrozo and Lazzari 2004a, Guerenstein and Guerin 2001). Moreover, in tests carried out in a locomotor compensator, it has been established that particular CO_2-containing blends of a few synthetic odorants representing a simplified version of host odor (Otálora-Luna et al. 2004) attract triatomines at levels higher than those evoked by their single constituents, in a synergistic way (Barrozo and Lazzari 2004b).

Due to their epidemiological importance, efforts have been made to develop devices to attract and capture triatomines in the field. Those devices contain a bait which consists of a live host (Noireau et al. 2002), another natural source of odor (Guerenstein et al. 1995, Lorenzo et al. 1998, Pedrini et al. 2009), a CO_2-containing synthetic host odor blend (Barrozo and Lazzari 2004b), plus an artificial source of heat (Ryelandt et al. 2011), or an aldehyde (Rojas de Arias et al. 2012). Despite some success using those baited devices in the field, more work is needed in order to reach a practical, efficient, and cheap bait for a trap based on host odor.

It has been shown that all the host odor constituents that triatomines are known to detect are also detected by other hematophagous insects, particularly mosquitoes (Guerenstein and Lazzari 2009, 2010). Therefore, it seems reasonable to test the attraction of a CO_2-free, synthetic host odor lure developed for mosquitoes, containing constituents that are also detected by triatomines. One such lure is the Sweetscent®, which consists of a mixture of three human-skin odors: ammonia, L(+) lactic acid, and hexanoic acid.

To assess the attraction efficiency of that synthetic odor mixture, we tested the behavior of triatomines using a challenging olfactometer (Guerenstein et al. 1995). In addition, to assess the capture efficiency of a pitfall trap with that synthetic odor mixture as lure, the behavior of triatomines in an experimental arena in the laboratory was tested. To successfully capture triatomines in those experiments, the

bugs should be activated, attracted, and finally, should fall into the trap. This implies a complex behavioral sequence already observed experimentally in the domiciliated species *R. prolixus* and *T. infestans* (Guerenstein et al. 1995, Lorenzo et al. 1999).

MATERIALS AND METHODS

Third instar larvae of *R. prolixus* and *T. infestans* were used. This nymphal stage was chosen to ensure a relatively high size ratio of the experimental devices to the insect. The triatomines were obtained from our colony, originally from insects provided by the Servicio Nacional de Chagas (Córdoba, Argentina). The colony was fed once every two weeks on hens and maintained in the laboratory under a 12/12h L/D illumination regime and at 27.5±1° C (Guerenstein and Guerin 2001). For experiments, insects were fed as 2nd instar larvae and, after molting, they were starved for 45-60 days for *R. prolixus,* and 30-40 days for *T. infestans*. These values were chosen according to data obtained by Guerenstein and Núñez (1994) on feeding motivation and resistance to starvation.

Olfactometer tests

To study the attraction evoked by different odor stimuli and test the ability of those odors to evoke capture-related behavior, insects were tested individually using a dual-choice olfactometer (Guerenstein et al. 1995). This device consisted of a polystyrene rectangular arena (11.5 cm length, 7 cm width, and 1 cm height) with a glass lid and three holes that were each connected to a plastic tube from below (Figure 1a). The three tubes had cloth mesh at the bottom. On one side of the arena, one of the tubes (the release-tube) contained the insect at the beginning of the experiment. Insects reached the surface of the arena by climbing onto a piece of cardboard inside the tube. On the opposite side of the arena were placed two capture-tubes (emanating control and test odor). The insects drop into the capture-tubes when sensing host odor from below (Guerenstein et al. 1995) and cannot escape, as the piece of cardboard within did not reach the surface of the arena. For *R. prolixus*, the olfactometer had a paper septum (3.5 cm length, 1 cm thickness, and 0.5 cm height) on the arena, between the capture-tubes, from the wall opposite the release-tube up to the center of the arena (Figure 1a).

Below each, the test and control capture-tubes, a 1-liter open glass bottle containing the odor source or its control was placed. The position of the test and control bottles was switched in successive trials. Air was pulled from the bottom of the release-tube at 6 ml/min, and therefore, an airstream from the odor source and its control constantly reached the release-tube via the capture-tubes and the arena (Guerenstein et al. 1995). Preliminary experiments showed that 6 ml/min was an optimal airflow, and that without airflow there was no behavioral response (unpublished observations).

Tests were carried out in darkness, starting 1 h before the beginning of the insects' scotophase and ending 2 h after the end of this phase. The experiments included the whole scotophase because triatomines search for a host during this time of the day (Guerenstein and Lazzari 2010). Temperature during experiments was 27±1° C for *R. prolixus* and 23±1° C for *T. infestans*. Before the experiment began, a bug was individually placed in the release-tube. Insects were allowed 5 min to habituate to the experimental situation and during this time the exit of the release-tube was closed. An experiment started when the exit was opened so that the bug was free to leave the release-tube. In the morning, the number of insects in the capture-tubes was recorded.

Our experimental design consisted of a battery of 12 olfactometers mounted on a cardboard box, so that 12 insects could be simultaneously tested in a single night. This allowed us to simultaneously test all stimuli and controls included in the experiments. Our design included a single fan that pulled air at a controlled flow from the box to which each of the 12 refuges tubes was connected. As one insect per olfactometer was assayed, the number of replicates (N) for each stimulus was equal to the number of insects tested for that stimulus. After each experimental night, olfactometers were disassembled, all material was thoroughly washed, and the cardboards pieces were discarded.

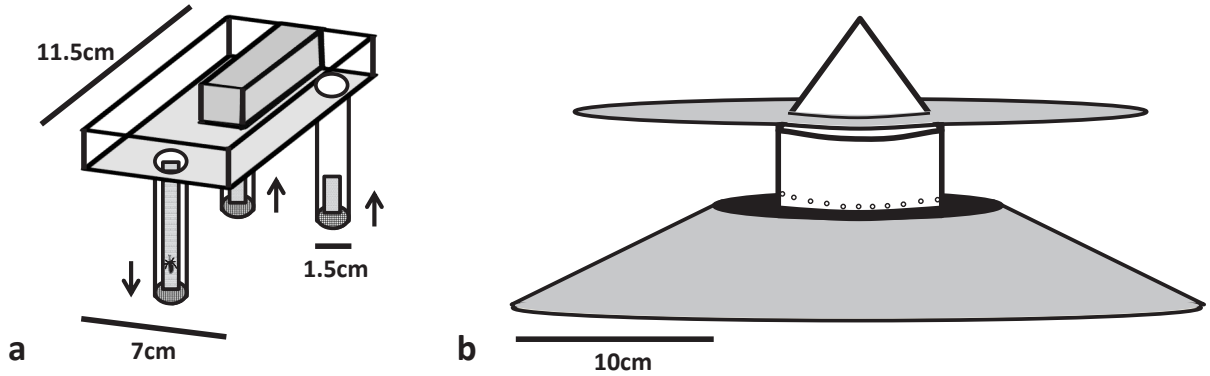

Figure 1. (a). Dual-choice olfactometer consisting of a polystyrene rectangular arena with a glass lid and three holes that are each connected to a plastic tube from below: one release-tube and two capture-tubes. The paper septum shown between the capture-tubes was only used in experiments with *R. prolixus*. (b). Pitfall trap device used in the experimental arena. Figures modified from Guerenstein et al. 1995.

We tested a CO_2-free synthetic host odor blend designed to attract *Aedes* mosquitoes and commercially known as Sweetscent® (Biogents AG, Regensburg, Germany), which contains ammonia, L(+) lactic acid, and hexanoic acid (Kröckel et al. 2006). Thus, the stimulus consisted of one sachet of this lure; a sachet included three compartments, one for each odor. Additionally, we tested the three components of this lure singly and also in all two-component combinations. In positive control experiments stimuli were: (1) a mouse (BALB-C strain) and (2) a culture of yeast prepared from LEVEX® dehydrated yeast as in Guerenstein et al. (1995), only for *T. infestans*. The attractiveness of a culture of yeast was already shown for triatomines (Guerenstein et al. 1995, Lorenzo et al. 1999, Pimenta et al. 2007, Pires et al. 2000). In negative control experiments, an empty bottle was placed below each capture-tube.

By quantifying the number of insects in the capture-tubes, the percentage total capture (%TC) and percentage oriented capture (%OC) were assessed. The %TC was defined as the total number of insects in the capture-tubes (test + control) over the total of insects tested. This parameter was statistically analyzed using the *G-test of independence* (Sokal and Rohlf 2009). Thus, we compared the odor-induced %TCs with those of the basal %TCs that were obtained in the negative control experiments. The %OC was defined as the number of insects in the test capture-tube over the total number of insects in both capture-tubes. This parameter was statistically analyzed using the one-tail binomial test (Zar 1999) to compare capture in test vs control capture-tubes.

Baited trap tests

After promising olfactometer experiments, the synthetic blend was tested for its usefulness as a lure for baited traps. A pitfall trap based on the same principle as the olfactometers (i.e., the insects can drop into it but cannot escape) was used (Guerenstein et al. 1995). Briefly, the trap consists of a circular access ramp (Figure 1b) from which the insects can drop into a polyvinyl container from which they cannot escape. In the center, a smaller container with one sachet of the lure is placed. Odors from the lure exit the small container through a series of holes in the wall near the base. When wandering insects reach the upper edge of the ramp, they perceive the odors as coming from below (Guerenstein et al. 1995).

Experiments were conducted in an open experimental arena (100 x 100 cm), with a paper floor and non-climbable glass walls. Two traps, test (baited with Sweetscent®) and control (with no bait), were placed at opposite corners of the arena (10 cm away from the edges). Tests were carried out in darkness, at 27±1° C, starting 1 h before the beginning of the insect scotophase and ending 2 h after the end of this phase. Before an experiment started, a group of 10 3rd instar nymphs of *R. prolixus* was placed at the center of the arena in a paper tube (length 5 cm, diameter 2 cm) closed with a cap that served as refuge. The experiment started 15 min later, when the cap was gently removed so that the insects could leave the paper tube. In the morning, the number of insects caught by each trap was recorded. The position of the control and experimental traps in the arena was switched in successive trials. No statistical analysis to compare capture in test and control traps was performed because capture in control traps was zero (see Results).

RESULTS

Olfactometer tests

Tests with the complete, three-component, synthetic blend

The percentage of *R. prolixus* caught in the capture-tubes (%TC) in negative control experiments was 15.0% (N=20), whereas a mouse evoked 68.7% TC (*G-test*, df=1, P<0.005, N=16) and the synthetic blend 57.9% TC (*G-test*, df=1, P<0.01, N=19, Figure 2a). The difference between %TC of mouse and the synthetic blend was not significant (*G-test*, df=1, P>0.5). Mouse was the stimulus that evoked the highest %OC, 90.9%, (*Binomial test*, P<0.006, N=11), whereas the synthetic blend evoked 81.8% OC (*Binomial test*, P<0.05, N=11, Figure 2a).

For *T. infestans,* the %TC in negative control experiments was 28.0% (N=25) whereas a mouse evoked 86.4% TC (*G-test,* df=1, P<0.001, N=22), a yeast culture 74.2% TC (*G-test*, df=1, P<0.001, N=31), and the synthetic blend 68.4% TC (*G-test*, df=1, P<0.001, N=57, Figure 2b). Statistical comparisons between positive controls and between them and the synthetic blend resulted in no statistical difference (mouse-yeast, *G-test*, df=1, P>0.25; yeast-synthetic blend, *G-test*, df=1, P>0.5; mouse-synthetic blend, *G-test*, df=1, P>0.05). The %OC when the stimulus consisted of a mouse was 94.7% (*Binomial test*, P<0.001, N=19), whereas a yeast culture evoked 69.6% OC (*Binomial test*, P<0.05, N=23), and the synthetic blend 66.7% OC (*Binomial test*, P<0.05, N=39, Figure 2b).

Tests with one or two components of the synthetic blend

No single odor constituent of Sweetscent® was able to evoke significant capture in the capture-tubes (Figure 3). Thus, the %TC in negative control experiments was 16.7%, (N=18) whereas ammonia evoked 12.5 %TC (*G-test*, df=1, P>0.25, N=16), L(+) lactic acid 16.7% (*G-test*, df=1, P>0.25, N=12), and hexanoic acid 25.0% (*G-test*, df=1, P>0.25, N=12). Moreover, no two-component blend evoked significant capture as the %TC for ammonia + L(+) lactic acid was 16.7% (*G-test*, df=1, P>0.25, N=12), whereas ammonia + hexanoic acid evoked 0.0% (*G-test*, df=1, P>0.25, N=12) and L(+) lactic acid + hexanoic acid 8.3% (*G-test*, df=1, P>0.25, N=12).

Baited-trap tests

The synthetic blend evoked trapping behavior in the experimental arena and all trapping could be attributed to the odor stimulus. Thus, using Sweetscent® we obtained capture in 37.5% of the lured traps and an average capture of 2.33 insects in each of those traps (N=8 trials, 78 insects tested). Of the total insects tested, 9.0% were captured by the traps. No insects were captured in the control trap. Clearly, the position of the test and control traps had no effect.

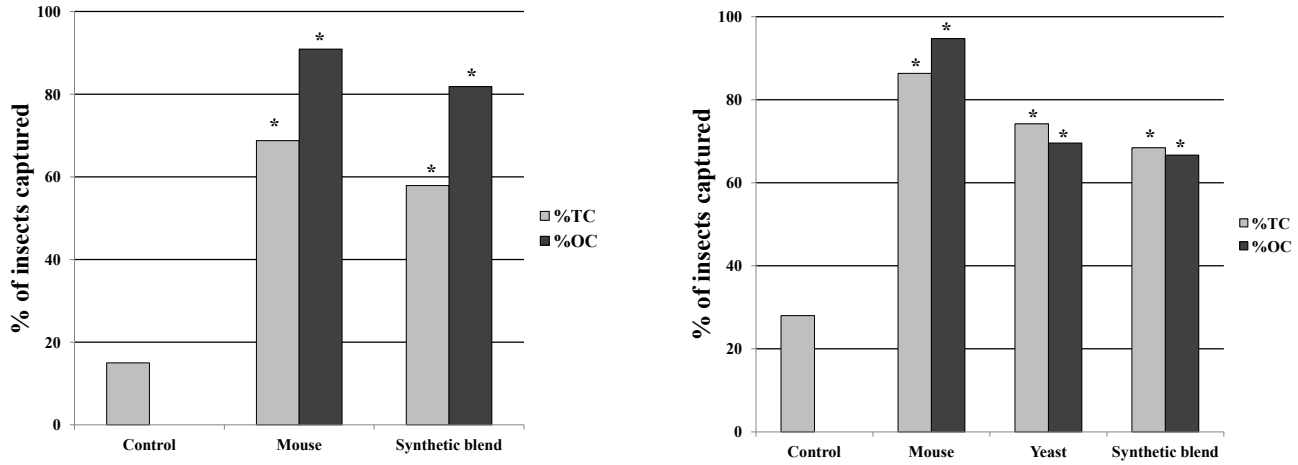

Figure 2. Percentage total capture (%TC) and percentage oriented capture (%OC) of *R. prolixus* (a) and *T. infestans* (b) by different stimuli. Test odors consisted of a mouse, a culture of yeast (only for *T. infestans*), and a synthetic host odor blend (Sweetscent®). In negative control experiments no odor stimulus was present in either of the capture-tubes. The synthetic blend evoked statistically significant %TC and %OC in both species. *= P<0.05.

DISCUSSION

We found that a CO_2-free synthetic blend of three host odors (ammonia, L(+) lactic acid, and hexanoic acid, the Sweetscent®) attracts and evokes trapping in triatomines. Only the two positive controls used in this work (a mouse and a culture of yeast) were previously known to evoke a trapping behavior in which the insects drop into the trap (Guerenstein et al. 1995, Lorenzo et al. 1999). Therefore, this work shows for the first time that it is possible to induce the insects to let themselves fall into a trap using a blend of a few synthetic odors. Moreover, previous work suggested that CO_2 was the main odor constituent responsibly for such a behavior (Guerenstein et al. 1995). Other experiments also suggested that CO_2 was necessary to obtain strong attraction (Barrozo and Lazzari 2004b, Guerenstein and Lazzari 2009, 2010, Otálora-Luna et al. 2004) However, we show that strong attraction and even trapping can be evoked by CO_2-free synthetic mixtures of host odor. This agrees with results recently obtained in the field (Rojas de Arias et al. 2012). It should be emphasized that CO_2 is an efficient bait for field traps (Botto-Mahan et al. 2002). However, the development of CO_2-free odor lures for field use should be advantageous because delivery of CO_2 in the field is short-lasting, expensive or both, making it less practical for use in field traps.

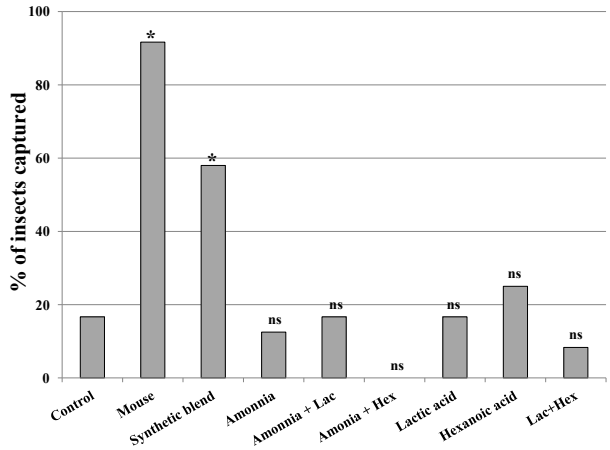

Figure 3. Percentage total capture (%TC) of *R. prolixus* by the three components of Sweetscent® when presented singly and in all two-component combinations. Results show that triatomines respond specifically to the three-component blend. *= P<0.05; ns= no statistical significance.

Even when CO_2 is not necessary to evoke a response, the simultaneous presentation of all three constituents of the synthetic lure used in this work is a requirement for triatomine attraction. When presented singly, none of the three constituents of the Sweetscent® attracted the insects in the olfactometers. Moreover, none of the three two-component combinations of the lure constituents evoked a response. Therefore, triatomines respond specifically to the three-component blend, in a synergistic way. It should be noted that as in triatomines, *Aedes* mosquitoes did not respond to single components of the same three-component blend. However, they responded in a synergistic way to a mixture of ammonia + lactic acid, whereas the addition of hexanoic acid to this mixture further increased attraction (Geier et al. 1999, Kröckel et al. 2006) as seen in triatomines.

Although neither the multimodal bait nor single aldehydes (see Introduction) have been tested in a pitfall trap so far, it should be noted that the trapping evoked by Sweetscent® in *R. prolixus* is lower than that elicited by a culture of yeast in the same species using a similar trap in a similar laboratory arena (Lorenzo et al. 1999). The emission of CO_2 by the yeast culture would be responsible for the higher response to this stimulus. We predict that by increasing the number of relevant constituents of the synthetic host odor blend, we may improve its performance. Thus, a blend with more than three relevant components would appear still closer to natural host odor, even when CO_2, an important host odor constituent,

is not included. Different mosquito species are attracted by CO_2-free odor blends (Guerenstein and Hildebrand 2008, Kröckel et al. 2006, Smallegange et al. 2005).

Our work represents a proof-of-concept regarding capture of triatomines using host odor-based, CO_2-free, synthetic mixtures as lures for pitfall traps. The synthetic mixture tested here activates, attracts, and traps triatomines using odors that can be continuously delivered for months at a low cost and under different environmental conditions. On the contrary, natural and CO_2-containing synthetic lures are less practical for field use. Although our results are encouraging, the efficiency of the blend tested here should be improved. In recent work it has been possible to capture triatomines using a single aldehyde as lure for a sticky trap (Rojas de Arias et al. 2012). It is important to compare the performance of the lure tested here with that of aldehydes.

Regarding the odor-baited trap design, most field work has been carried out using sticky traps (Noireau et al. 2002, Rojas de Arias et al. 2012, Ryelandt et al. 2011). It would be relevant to compare the efficiency of sticky traps, whose performance could be affected by ambient conditions such as humidity, rain, and dust, with pitfall traps in the field.

It has been suggested that continuous surveillance followed by selective intervention is necessary, even in regions where triatomine control has already been successful (Gürtler et al. 2007, Schofield et al. 2006). Thus, a practical, cheap and sensitive tool for early detection of low density populations of triatomines is needed (Tarleton et al. 2007). A trap that efficiently captures triatomines could become an important tool for the monitoring of house infestation. In addition, it could be useful in the search for sylvatic foci of triatomines (Bacigalupo et al. 2010).

Acknowledgments

We thank Fundación Bunge y Born and Agencia Nacional de Promoción Científica y Tecnológica, Argentina, for funding this project through grants FBB28/10 and PICT-PRH-2009-43, respectively. We also thank the Consejo Nacional de Investigaciones Científicas y Técnicas (CONICET), Argentina for funding our work and for a fellowship to FG. We are grateful to the Servicio Nacional de Chagas (Argentina) for providing the insects that originated our colonies. We are also thankful to Lic. Silvia Etcheverry for technical assistance and Dr. Esteban Passeggi for advice in statistics.

REFERENCES CITED

Bacigalupo A., F. Torres-Pérez, V. Segovia, A. García, J.P. Correa, L. Moreno, P. Arroyo, and P.E. Cattan. 2010. Sylvatic foci of the Chagas disease vector *Triatoma infestans* in Chile: description of a new focus and challenges for control programs. Mem. Inst. Oswaldo Cruz 105: 633-641.

Barrozo, R.B. and C.R. Lazzari. 2004a. The response of the blood-sucking bug *Triatoma infestans* to carbon dioxide and other host odours. Chem. Senses 29: 319-329.

Barrozo, R.B. and C.R. Lazzari. 2004b. Orientation behaviour of the blood-sucking bug *Triatoma infestans* to short-chain fatty acids: synergistic effect of L-lactic acid and carbon dioxide. Chem. Senses 29: 833-841.

Botto-Mahan C., P.E. Cattan, and M. Canals. 2002. Field tests of carbon dioxide and conspecifics as baits for *Mepraia spinolai*, wild vector of Chagas disease. Acta Trop. 82: 377-380.

Geier, M., O.J. Bosch, and J. Boeckh. 1999. Ammonia as an attractive component of host odour for the yellow fever mosquito, *Aedes aegypti*. Chem. Senses 24: 647-653.

Guerenstein, P.G. and P.M. Guerin. 2001. Olfactory and behavioral responses of the blood-sucking bug *Triatoma infestans* to odors of vertebrate hosts. J. Exp. Biol. 204: 585-597.

Guerenstein P.G. and J.G. Hidebrand. 2008. Roles and effects of environmental carbon dioxide in insect life. Annu. Rev. Entomol.53: 161-178.

Guerenstein, P.G. and C.R. Lazzari. 2009. Host-seeking: How triatomines acquire and make use of information to find blood. Acta Trop. 110: 148-158.

Guerenstein, P.G. and C.R. Lazzari. 2010. The role of olfaction in host seeking of Triatominae bugs. In: W. Takken and B. Knols (eds.). *Ecology and Control of Vector- Borne Diseases Volume II: Olfaction in Vector-Host Interactions*. pp. 309-325. Wageningen University Press, Wageningen, The Netherlands.

Guerenstein, P.G., M.G. Lorenzo, J. Núñez, and C.R. Lazzari. 1995. Baker's yeast, an attractant for baiting traps for Chagas' disease vectors. Experientia 51: 834-837.

Guerenstein, P.G. and J. Núñez. 1994. Feeding response of the haematophagous bugs *Rhodnius prolixus* and *Triatoma infestans* to saline solutions: a comparative study. J. Insect Physiol. 40: 741-752.

Gürtler, R.E., U. Kitron, M.C. Cecere, E.L. Segura, and J.E. Cohen. 2007. Sustainable vector control and management of Chagas disease in the Gran Chaco, Argentina. Proc. Natl. Acad. Sci. USA 104: 16194-16199.

Kröckel, U., A. Rose, A.E. Eiras, and M. Geier. 2006. New tools for surveillance of adult yellow fever mosquitoes: comparison of trap catches with human landing rates in an urban environment. J. Am. Mosq. Contr. Assoc. 22: 229-238.

Lehane, M.J. 2005. *The Biology of Blood-sucking Insects*. Cambridge University Press, New York, U.S.A.

Lorenzo, M.G., G. Manrique, H.H.R Pires, M.G. de Brito Sánchez, L. Diotaiuti, and C.R. Lazzari. 1999. Yeast culture volatiles as attractants for *Rhodnius prolixus*: electroantennogram responses and captures in yeast-based traps. Acta Trop. 72: 119-124.

Lorenzo, M.G., C.E. Reisenman and C.R. Lazzari. 1998. *Triatoma infestans* can be captured under natural conditions using yeast-baited traps. Acta Trop. 70: 277-284.

Noireau, F., F. Abad-Franch, S.A.S. Valente, A. Dias-Lima, C.M. Lopez, V. Cunha, V.C. Valente, F.S. Palomeque, C.J. Carvalho-Pinto, I. Sherlock, M. Aguilar, M. Steindel, E.C. Grisard, and J. Jurberg. 2002. Trapping Triatominae in

sylvatic habitats. Mem. Inst. Oswaldo Cruz 97: 61-63.

Núñez, J.A. 1987. Behavior of triatomine bugs. In: R.R. Brenner and A.M. Stoka (eds.) *Chagas' Disease Vectors*. Vol II. pp. 1-28. CRC Press, Boca Raton, U.S.A.

Ortiz, M. and J. Molina. 2010. Preliminary evidence of *Rhodnius prolixus* (Hemiptera: Triatominae) attraction to human skin odours extracts. Acta Trop. 113: 174-179.

Otálora-Luna, F., J.L. Perret, and P.M. Guerin. 2004. Appetence behaviours of the triatomine bug *Rhodnius prolixus* on a servosphere in response to the host metabolites carbon dioxide and ammonia. J. Comp. Physiol. A 190: 847-854.

Pedrini, N., S.J. Mijailovsky, J.R. Girotti, R. Stariolo, R.M. Cardozo, A. Gentile, and M.P. Juárez. 2009. Control of pyrethroid-resistant Chagas disease vectors with entomopathogenic fungi. PLoS Negl. Trop. Dis. 3: e434. doi:10.1371/journal.pntd.0000434

Pimenta, F.V., L. Diotaiuti, A.C. Lustosa Lima, and M.G. Lorenzo. 2007. Evaluation of cultures of *Saccharomyces cerevisae* as baits for *Triatoma dimidiata* and *Triatoma pallidipennis.* Mem. Inst. Oswaldo Cruz 102: 229-231.

Pires, H.H.R., C.R. Lazzari, L. Diotaiuti, and M.G. Lorenzo. 2000. Performance of yeast-baited traps with *Triatoma sordida*, *Triatoma brasiliensis*, *Triatoma pseudomaculata*, and *Panstrongylus megistus* in laboratory assays. Pan. Am. J. Publ. Hlth. 7: 384-388.

Rojas de Arias, A., F. Abad-Franch, N. Acosta, E. López, N. González, E. Zerba, G. Tarelli, and H. Masuh. 2012. Post-control surveillance of *Triatoma infestans* and *Triatoma sordida* with chemically-baited sticky traps. PLoS Negl. Trop. Dis. 6: e1822. doi:10.1371/journal.pntd.0001822.

Ryelandt, J., F. Noireau, and C.R. Lazzari. 2011. A multimodal bait for trapping blood-sucking arthropods. Acta Trop. 117: 131-136.

Schofield, C.J. 1994. *Triatominae Biology and Control.* Eurocommunica Publications, Sussex, UK.

Schofield, C.J., J. Jannin, and R. Salvatella. 2006. The future of Chagas disease control. Trends Parasitol. 22: 583-588.

Smallegange R.C., Y.T. Qiu, J.J.A. van Loon, and W. Takken. 2005. Synergism between ammonia, lactic acid and carboxylic acids as kairomones in the host-seeking behaviour of the malaria mosquito *Anopheles gambiae sensu stricto* (Diptera Culicidae). Chem. Senses 30: 145-152.

Sokal, R.R. and F.J. Rohlf. 2009. *Introduction to Biostatistics*, 2nd ed. Dover Publications Inc., New York, U.S.A.

Taneja, J. and P.M. Guerin. 1997. Ammonia attracts the haematophagous bug *Triatoma infestans* : Behavioural and neurophysiological data on nymphs. J. Comp. Physiol. A 181: 21-34.

Tarleton, R.L., R. Reithinger, J.A. Urbina, U. Kitron, and R.E. Gürtler. 2007. The challenges of Chagas disease - grim outlook or glimmer of hope? PLoS Med. 4:e332. doi:10.1371/journal.pmed.0040332.

World Health Organization. 2010. Chagas disease (American trypanosomiasis). Fact sheet N°340. http://www.who.int/mediacentre/factsheets/fs340/en/index.html.

Zar, J.H. 1999. *Biostatistical Analysis*, 4th ed. Simon and Schuster, New Jersey, U.S.A.